Implementation of Damage Tolerance Concepts for Metallic Rotorcraft Structures and Drive Train Components

Dy D. Le
Airport and Aircraft Safety R&D Division
Federal Aviation Administration
Atlantic City International Airport, NJ 08405
e-mail: Dy.Le@tc.faa.gov

Charles C. Harrison
Rotorcraft Directorate
Federal Aviation Administration
Fort Worth, TX 76193
e-mail: Charles.C.Harrison@faa.gov

Mel F. Kanninen
Galaxy Scientific Corporation
San Antonio, TX 78229
e-mail: mfkanninen@aol.com

SUMMARY

The Federal Aviation Administration (FAA), in collaboration with other government agencies, the rotorcraft industry, and academia, has initiated a comprehensive rotorcraft damage tolerance (RCDT) research and development (R&D) program. This program is intended to support a rulemaking effort aimed at revising Title 14 Code of Federal Regulation (CFR) 29.571, which pertains to fatigue evaluation of transport category rotorcraft. This paper presents the RCDT R&D plan, provides highlights of critical research progress, and shows how this work supports potential future FAA regulatory actions for assuring flight safety of rotorcraft structural components.

INTRODUCTION

Rotorcraft structural components experience high-frequency cyclic loads in practically every flight regime. While the effects of high-frequency cyclic stresses have always been a primary consideration in the regulatory process, as recorded in recent history, rotorcraft usage has become much more diverse and, in some cases, significantly more severe. It has become clear that additional practical methods to control aeronautical fatigue than have previously been used for rotorcraft are needed to directly support the safety goals of the Federal Aviation Administration's (FAA) Safer Skies and National Aging Aircraft Programs. The technology that must be used to meet this need significantly transcends the requirements that suffice for fixed wing aircraft structure and engine components. The damage tolerance (DT) methodology that has evolved and matured in fixed-wing aircraft applications that is now available must be enhanced and modified to complement the rotorcraft industry's methodologies for managing fatigue critical components in their aircraft. As a result, the FAA has initiated a rotorcraft damage tolerance program to accomplish the development and enhancement of DT technologies.

Many rotorcraft operations are unique and present numerous challenges to implementing the fracture mechanics techniques that are a basic part of a damage tolerance program. Some of the major considerations in the development and deployment of a damage tolerance program for rotorcraft are

- accumulation of cyclic loads at such a high rate that fracture mechanics techniques must be applied to very small, irregularly shaped, and inconveniently positioned initial flaws to obtain acceptable in-service inspection intervals.
- extensive use of shot peening and other types of surface treatments to retard fatigue crack growth make conventional fracture mechanics analyses in most cases overly conservative.
- rotorcraft operations experience significantly more variable and complex flight load spectra that must be used for fatigue life predictions than are usually encountered in fixed-wing aircraft and engines.

In view of these and other unique considerations, there are three key steps that must be met to establish a rotorcraft damage tolerance (RCDT) methodology and operational safety procedure. The first is to extend the currently available DT techniques to properly evaluate the much more demanding conditions that occur in rotorcraft structural and dynamic components. The second is to transfer these extended techniques such that they can be validated and used routinely by the industry. The third step is to ensure that the RCDT methodology that is developed complements the various existing fatigue control methodologies (including safe-life, enhanced safe-life, and fail-safe approaches) that have been extensively used by the rotorcraft industry over the years.

HISTORICAL OVERVIEW OF ROTORCRAFT REGULATORY PROCEDURES

The FAA, in collaboration with other government agencies, the U.S. rotorcraft industry, and academia, has identified several areas in which research is needed to support the FAA's new rotorcraft rulemaking effort. This work, which additionally requires development of new guidance materials, is aimed at the proposed revision of Title 14 Code of Federal Regulation (CFR) 29.571, "Fatigue Evaluation," to make fuller use of DT. The DT methodology has long been successfully established for fixed-wing aircraft. These fixed-wing DT methodologies have been assessed to determine the extent to which they can be applied to rotorcraft. For two decades, the FAA Rotorcraft Directorate has attempted to incorporate these DT methodologies into 14 CFR 29.571. However, because of a general perception that weight penalties and reduced lifetimes might occur, this has not been done. Because of the unique conditions in which rotorcraft operate, it has been shown through the experimental application of the technology that new and/or enhanced DT technologies and applicable tools are needed by the rotorcraft industry. Research to develop, refine, adapt, and validate these technologies is currently underway, and some of the research is outlined later in this paper.

The FAA's responsibilities for increasing aviation safety in the rotorcraft structural integrity area are generally met by actions that are aimed at (1) reducing the number of fatalities caused by fatigue and fatigue-related failures in rotorcraft structure and (2) increasing the rate of detection of anomalies that cause the failure of the rotorcraft structure. The current rule, 14 CFR 29.571, Fatigue Evaluation,[1] requires transport category rotorcraft structures to have the capability to continue functioning without catastrophic failure (fatigue tolerant) after being exposed to the repeated fatigue loads expected during the operational life of the rotorcraft.

According to the rule, fatigue tolerance requirements are satisfied by safe-life, flaw-tolerant safe-life (enhanced safe-life), fail-safe (residual strength after flaw growth) evaluation, or by a combination thereof. The fatigue tolerance evaluation is also mandated to include a determination of the probable locations and modes of damage caused by fatigue, considering environmental effects, intrinsic and discrete flaws, and accidental damage.

In 1999, the Rotorcraft Industry Working Group (RCWG), tasked by the FAA and the Technical Oversight Group for Aging Aircraft (TOGAA), completed an in-depth review of the current rotorcraft fatigue and damage tolerance approaches [2] and presented a final report entitled "Rotorcraft Fatigue and Damage Tolerance." After having reviewed the RCWG's final report, TOGAA recommended to the FAA that a DT approach should be used as a first principles method for determining inspection requirements, evaluating crack sensitivity, and for the design evaluation option study accomplished on new designs. This method was to complement the safe-life methodology currently being used by the rotorcraft manufacturers to determine the life limits on various primary structural elements. As a result of the TOGAA recommendations, the FAA National Aging Aircraft Program Plan[3] and the successes in using DT in transport airplanes and engines in 2000, the FAA initiated a rulemaking process to revise the requirements of 14 CFR 29.571.

As the primary support for revising 14 CFR 29.571, the FAA established the Aviation Rulemaking Advisory Committee (ARAC) team. This committee consists of several representatives from the FAA, the European Joint Airworthiness Authority (JAA), and U.S and the European rotorcraft industry. This group works together to draft harmonized proposed rules to present to the FAA for evaluation and public comment. The RCDT research that is being managed by the FAA's William J. Hughes Technical Center aims at providing the ARAC with validated technical information that can be used to support the development of advisory circular guidance material.

ROTORCRAFT DAMAGE TOLERANCE RESEARCH AND PROGRESS HIGHLIGHTS

Determining the inspection intervals, and in some cases, the life of a given aircraft component, using the DT methodology requires roughly comparable technological capabilities in four distinct areas. These are (1) the ability to perform nondestructive inspections (NDI) to detect, or postulate the existence of, a crack-like defect in the component; (2) quantitative knowledge of the cyclic stresses imposed on the component by the assumed applied loading spectrum; (3) measurements of the basic fatigue crack growth and fracture properties of the material used in the component; and (4) development and appropriate use of fracture mechanics analysis techniques for quantifying fatigue crack growth from an initiating crack and for determining the residual strength-based limit load condition.

To different degrees, the currently existing capabilities in all four of these areas are inadequate for direct application to some rotorcraft structural components. This has been echoed by the consensus of the regulatory, industry, and academia participants in two recent international forums focused on rotorcraft fatigue. The prioritized technical issues identified for the RCDT research program developed by the FAA in collaboration with the Rotorcraft Industry Technology Association (RITA) for metallic rotorcraft components are shown and compared with the conclusions reached at each of the venues in Table 1. It can be seen from this table that there are at least ten different significant RCDT areas that a consensus believes need to be addressed by research. However, with limited resources available for rotorcraft research,

independently, addressing all of these issues simultaneously cannot be done practically. As a result, the FAA established a cooperative RCDT program conducted by the RITA (Bell Helicopter Textron, Inc., Sikorsky Aircraft, and Boeing Philadelphia) under the National Rotorcraft Technology Center's (NRTC) umbrella.

Table 1. Prioritized FAA/RITA RCDT Research Plan

Priority Level	RCDT ResearchTopics	Coincides with Conclusion from: Cranfield Workshop[4]	AHS Meeting[5]
1	RCDT specific issues study		X
2	Spectrum development and usage monitoring	X	X
3	Equivalent initial flaw size determination	X	X
4	Fatigue crack growth database development	X	X
5	Nondestructive inspection/evaluation	X	X
6	Certification testing methods	X	X
7	Life enhancement methods	X	X
8	CGA validations on specific rotor components	X	X
9	Risk assessment methods		X
10	Corrosion control		X

Additionally, the FAA has also been supporting the University of California, Los Angeles (UCLA) in advancing the accuracy and efficiency of the fracture mechanics analyses needed in RCDT through the development and enhancement of computational fracture mechanics (FM) techniques. The FM techniques developed at UCLA are currently being validated by rotorcraft industry engineers in actual and simulated fatigue crack growth applications, including rotorcraft fuselage and drive system dynamic components.

The FAA-supported rotorcraft damage tolerance research being conducted at UCLA has produced an innovative new analysis methodology that is based on a multistage hierarchical computational mechanics approach known as Automated, Global, Intermediate, and Local Evaluation (AGILE). AGILE is a suite of software tools that was developed for the automation of hierarchical analysis of complex structures. It is used to evaluate the fracture parameters of two-dimensional (2D) and three-dimensional (3D) cracks, primarily the stress-intensity factors, but also the J integral when nonlinear conditions cannot be ignored in an RCDT analysis.

The Finite Element Alternating Method (FEAM) is used to evaluate the fracture parameters due to its efficiency. FEAM allows the user to calculate the fracture parameters very accurately without excessive computational power. However, the FEAM software is currently limited to a pure 2D plane or 3D solid structure with uniform material properties. The implementation cannot handle a large-scale model efficiently. Combining the FEAM with a conventional finite element approach using a hierarchical analysis strategy overcomes the drawbacks by performing a series of multiple stage solutions in which:

- the whole structure is analyzed using a conventional finite element method.
- a subregion of the structure containing the crack with the appropriate boundary conditions is extracted.
- the subregion is solved using FEAM and the appropriate fracture parameters are calculated.

The two dimensional version of AGILE, AGILE-2D, allows the full geometric complexity of a rotorcraft fuselage structure to be taken into account while efficiently determining the stress-

intensity factors over large crack growth increments without any need for remeshing. This specialization of AGILE is generally intended for DT applications typified by the fuselage structure shown in Figure 1.

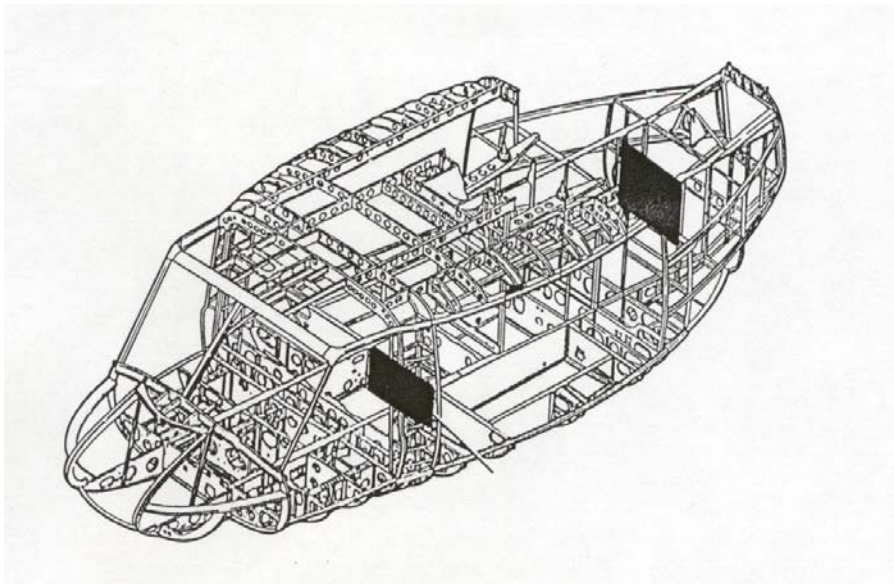

Figure 1. Typical rotorcraft fuselage structure

Because rotorcraft structural components accumulate cyclic loads at very high rates, very small arbitrarily shaped and warped cracks can occur. In addition to a linear elastic fracture mechanics (LEFM) validity requirement that the crack size be significantly greater than the plastic zone size, conventional fracture mechanics address only planar cracks. For these reasons, a three-dimensional version of AGILE, AGILE-3D, has been developed to determine the stress-intensity factors around the periphery of arbitrarily shaped and oriented cracks in rotorcraft drive system dynamic components. AGILE-3D additionally allows elastic-plastic fracture mechanics parameters to be determined for conditions in which conventional LEFM procedures are invalid. While it will have a broad range of usage, AGILE-3D is primarily aimed at rotorcraft drive system components such as those included in the configuration shown in Figure 2.

The main hurdle for RCDT is the treatment of a complex component like that shown in Figure 2 with very rapid accumulations of cyclic loads. There could, for example, be one, four, and eight load cycles per blade revolution in the main rotor system that is shown in Figure 2. In the case of a typical rotor system operating at 300 revolutions per minute (rpm), significant cyclic loads anywhere from approximately 5 to 40 Hz can be produced and those loads must be considered. This, in turn, requires fatigue crack growth analyses that start from extraordinarily small and nonuniform initial cracks.

To analyze 3D nonplanar cracks, an efficient and highly accurate analysis technique using a combination of the Symmetric Galerkin Boundary Element Method (SGBEM) and the Finite Element Alternating Method (FEAM) was developed at UCLA[6]. This methodology addresses not only the initiation of growth, but also the subsequent unconstrained growth (i.e., as exclusively dictated by the deformation state existing at and near to the current crack tip) in structural components of complex geometries. In this approach, the crack is modeled by the SGBEM as a distribution of displacement discontinuities, as if in an infinite medium. The SGBEM is a way of satisfying the boundary integral equations of elasticity in a Galerkin weak

form, as opposed to the method of collocations that is generally used to satisfy the integral equations in the traditional Boundary Element Method (BEM).

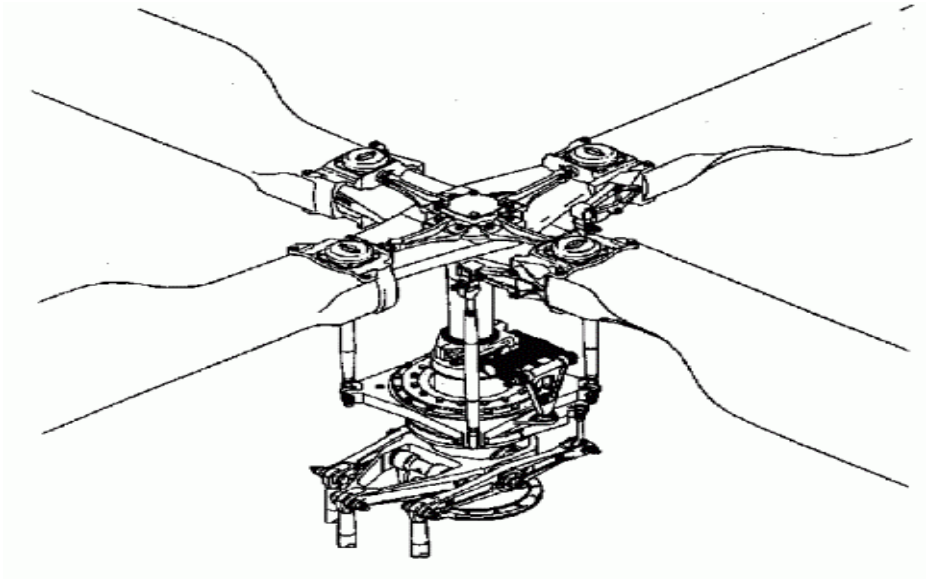

Figure 2. Example of multibladed rotorcraft main rotor system

Specifically, the SGBEM helps to overcome some drawbacks of the traditional BEM because it is characterized by weak singular kernels. After a special transformation removes the singularities from the kernels, the boundary element matrices are integrated with the use of the usual Gaussian quadrature rule. The SGBEM-FEM alternating method for the analysis of cracks in finite bodies alternates between the FEM solution for an uncracked structural component of finite geometry and the SGBEM solution for a crack in an infinite body, as depicted in figure 3. Upon convergence, a near exact solution matrix of stress–intensity factors are compiled for the crack front, which, in turn, are used in the crack growth analysis program to obtain crack growth rates. Other distinguishing features of AGILE-3D are that it is capable of handling nonplanar cracks and is able to compute a "J-Vector" at each point along the periphery of a crack surface. This is the direction in which the value of J accompanying an additional increment of crack extension would be maximized. With these features, fatigue crack growth from an arbitraily nonplanar surface can be continued in the most appropriate direction for subsequent nonplanar fatigue crack propagation.

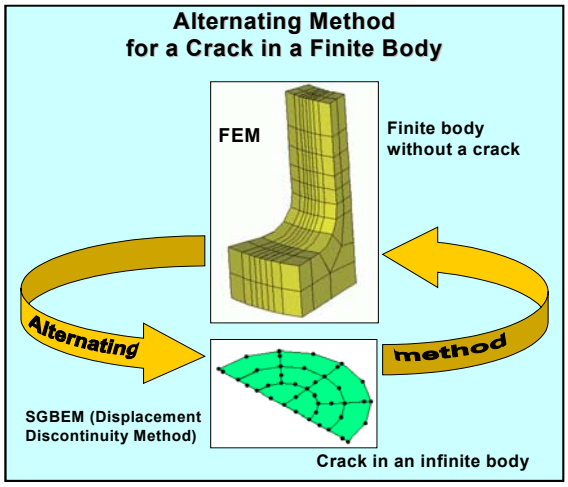

Figure 3. The alternating method for a crack in a finite body

OTHER CRITICAL ROTORCRAFT DAMAGE TOLERANCE RESEARCH TOPICS

Shot peening and other forms of surface treatment that induce compressive residual stresses to retard fatigue crack growth are important in rotorcraft. The research that has been done to date has generally been based on LEFM. However, because the surface treatment processes that are used inelastically deform the material, an elastic-plastic approach is necessary. Such an approach would first determine the residual stress state that is induced by the various procedures. The second stage of this research would devise an elastic-plastic fatigue crack growth computational analysis model that would be valid for cracks moving through the inelastically deformed regions.

A second key area for further research is one that would enable fracture mechanics methods to directly apply when a body with a hole, dent, flaw, or another form of stress riser is subjected to cyclic loads that generate a crack. What is needed is the capability that, perhaps embedded within a localized model in a hierarchical computational procedure, formulates and quantifies the processes of ductile void nucleation, growth and coalescence that reflect the manner in which cracks incubate and, eventually, start to propagate.

CONCLUDING REMARKS

The FAA has long been aware of the potential beneficial impact that damage tolerance could make in regard to the operational safety of rotorcraft. Efforts have been made over the past two decades to incorporate it into its regulations. However, largely because of a general perception that the DT methodology developed for fixed-wing aircraft would likely lead to significant weight penalties and reduced lifetimes in the more demanding conditions occurring in rotorcraft, this DT approach incorporation has not been done. The main barrier to the adoption of damage tolerance for rotorcraft—the need to quantify crack growth from small and nonplanar cracks and non-crack-like defects that occur in rotorcraft in the form of corrosion pits, dents, scratches, and other blunt-ended damage—is being pursued to enable this to be accomplished.

To address the legitimate concerns associated with full use of DT, the FAA has undertaken a cooperative research program to establish rotorcraft damage tolerance technology. While additional challenges must be addressed with further work, the prospects for the routine

use of damage tolerance for rotorcraft safety of flight applications, in conjunction with current safe-life and fail-safe procedures, appear to be outstanding.

ACKNOWLEDGMENTS

The descriptions of the computational progress that are included in this paper have drawn upon the FAA-supported research on computational damage tolerance directed by Professor Satya N. Atluri at UCLA. The research areas identified in Table 1 were developed by the FAA and three major U.S. helicopter-manufacturing companies (Bell Helicopter Textron, Inc., Sikorsky Aircraft, and Boeing Philadelphia).

With great pleasure, the authors would like to acknowledge the contributions to the advancement of rotorcraft damage tolerance technologies of Prof. Atluri and Dr. Gennadyi Nikishkov of UCLA, Dr. Douglas Tritsch of Sikorski Aircraft, James D. Cronkhite of Bell Helicopter Textron, Inc., and William Weiss of Boeing Philadelphia.

With great respect, the authors would also like to express their appreciation of great guidance and support given by the Director of Airport and Aircraft Safety, Chris Seher; Airworthiness Assurance R&D Branch Manager, Dr. Catherine Bigelow; Aging Aircraft Manager, Dr. Christopher Smith; and Airframes and Structures Section Manager, Dr. Paul Tan at the FAA William J. Hughes Technical Center.

REFERENCES

1. Anon., Code of Federal Regulations, Part 14, Office of Federal Register, National Archives and Records Administration, Washington, D.C., 1999, pp. 625-626.

2. Cronkhite, J.D., Rousseau, C., Harrison, C., Tritsch, D., and Weiss, W., Research on Practical Damage Tolerance Methods for Rotorcraft Structures, presented at the American Helicopter Society 56th Annual Forum, Virginia Beach, VA, 2-4 May 2000.

3. National Aging Aircraft Program Plan, FAA/AIR/98/03, Revision 1, Paragraph 10.3.1, Sept. 1998.

4. Irving, P.E., organizer, Workshop on Damage Tolerance in Helicopters, Cranfield University, UK, 4-5 April 2000.

5. Cronkhite, J.D., organizer, Special Session at the American Helicopter Society 56th Annual Forum, Virginia Beach, VA, 2-4 May 2000.

6. Nikishkov, G.P., Advances in Computational Engineering & Sciences 2000, S.N. Atluri and F.W. Brust, Volume 1, Tech Science Press, Palmdale, CA, pp. 264-269, 2000.