CHAPTER III

SECTION 2.0

ELECTROTHERMAL SYSTEMS

CHAPTER III—ICE PROTECTION METHODS

CONTENTS

				Page
III 2.	ELECTROTHERMAL SYSTEMS			II 2-1
	III.2.1	Operating Concepts and Components		III 2-1
	III.2.2	Design Guidance		III 2-2
		III.2.2.1	Anti-Icing Systems	III 2-2
		III.2.2.2	Deicing Systems	III 2-3
	III.2.3	Usages and Special Requirements		III 2-4
		III.2.3.1	Airfoils and Leading-Edge Devices	III 2-6
			III.2.3.1.1 Airfoils	III 2-6
			III.2.3.1.2 Leading-Edge Devices	III 2-6
		III.2.3.2	Windshields	III 2-10
		III.2.3.3	Engine Inlet Lips and Components	III 2-15
			III.2.3.3.1 Inlet Types	III 2-15
			III.2.3.3.2 Power and Cycling	III 2-16
			III.2.3.3.3 Materials	III 2-16
		III.2.3.4	Turbofan Components	III 2-17
		III.2.3.5	Propellers and Spinners	III 2-17
		III.2.3.6	Helicopter Rotors and Hubs	III 2-20
			III.2.3.6.1 Heater Elements	III 2-21
			III.2.3.6.2 Deicing Power Supply	III 2-23
			III.2.3.6.3 Power Switching and Distribution	III 2-23
			III.2.3.6.4 Deicing Controller	III 2-23
			III.2.3.6.5 External Sensors	III 2-24
		III.2.3.7	Flight Sensors	III 2-24
		III.2.3.8	Radomes and Antennas	III 2-25
			III.2.3.8.1 Radomes	III 2-25
			III.2.3.8.2 Antennas	III 2-25
		III.2.3.9	Miscellaneous Intakes and Vents	III 2-25
		III.2.3.10	Other	III 2-25

III.2.4 Weight and Power Requirements III 2-25
III.2.5 Actuation, Regulation, and Control III 2-26
III.2.6 Operational Use III 2-27

III.2.6.1 Anti-Icing Systems III 2-27
III.2.6.2 Deicing Systems III 2-27

III.2.6.2.1 Typical System Operation III 2-27
III.2.6.2.2 Test Considerations III 2-28

III.2.7 Maintenance, Inspection, and Reliability III 2-32
III.2.8 Penalties III 2-32
III.2.9 Advantages and Limitations III 2-33
III.2.10 Concerns III 2-33
III.2.11 References III 2-34
III.2.12 Glossary iii 2-34

LIST OF FIGURES

Figure Page

III 2-1 Areas of Airframe That May Require Ice Protection III 2-2

III 2-2 Cross Sections of Typical Electric Heaters III 2-3

III 2-3 Electrothermal Wing Anti-Icing System III 2-7

III 2-4 Typical Wing Leading Edge With Slat III 2-8

III 2-5 Typical Wing Leading-Edge Krueger Flap III 2-8

III 2-6 Ice Accretion on Unprotected Extended Leading-Edge Flap for Maximum Continuous Icing Conditions III 2-9

III 2-7 Typical Electrically Heated Windshield Contruction III 2-10

III 2-8 Typical Windshield Areas to be Protected for Two Windshield Arrangements on Multiengine Transport III 2-11

III 2-9 Typical Main Windshield Showing Contruction and Location of Conductive Films and Sensing Elements III 2-12

III 2-10 Typical Main Windshield Showing Contruction and Location of Conductive Films and Sensing Elements III 2-13

III 2-11 Typical Main Windshield Showing Contruction and Location of Conductive Films and Sensing Elements III 2-13

III 2-12 Typical Anti-Icing Heat Requirements Versus Altitude for Center Windshield Panel III 2-14

III 2-13 Electrothermal Propeller Deicing System III 2-18

III 2-14 Typical Propeller and Spinner Ice Protection for Turboprop Aircraft III 2-19

III 2-15 Main Components for Rotor Deicing System III 2-20

III 2-16 Spanwise Heater Element Arrangement III 2-21

III 2-17 Chordwise Heater Element Arrangement III 2-21

III 2-18 Deicing System Optimization III 2-31

III 2-19 Data and Control Function In-Flight Monitor III 2-32

LIST OF TABLES

Table Page

III 2-1 Weight and Power Requirements for Electrothermal Ice Protection Systems III 2-26

SYMBOLS AND ABBREVIATIONS

Symbol	Description
ac	Alternating Current
Btu	British Thermal Unit
°C	Degrees Celsius
CAR	Civil Air Regulation
cm	Centimeter
CRT	Cathode Ray Tube
dc	Direct Current
EMI	Electromagnetic Interference
EOT	Element on-time
°F	Degrees Fahrenheit
ft	Feet or foot
hp	Horsepower
in	Inch
kg	Kilogram
kW	Kilowatt
lbf	Pounds force
lbm	Pounds mass
lbs	Pounds
LWC	Liquid Water Content
m	Meter
mm	Millimeter
MVD	Median Volume Diameter
NACA	National Advisory Committee for Aeronautics
OAT	Outside Air Temperature
sq	Square
S/R	Slip Ring
V	Velocity
Vdc	Volts Direct Current
W	Watts

III.2 ELECTROTHERMAL SYSTEMS.

III.2.1 OPERATING CONCEPTS AND COMPONENTS.

All thermal ice protection systems operate on the same principle: Heat is applied to an area encompassing the water impingement region. The heat is used to evaporate or prevent impinging cloud droplets from freezing or to debond or melt an existing ice cap. The equipment required for electrothermal systems is the same in either case: a source of electrically generated heat, a distribution system, and a control system.

Two sources of the required electrical energy are considered in this section:

a. Extraction from the airplane's own electrical system.
b. A separate onboard generator with its own source of power.

The electrical energy is distributed to the areas requiring anti-icing or deicing. It then flows through resistance heaters designed to provide the necessary heat for either anti-icing or deicing of the surface.

Major components of an electrothermal system are:

a. Source of electrical energy.

b. Wiring system to distribute energy to the surfaces to be heated.

c. Resistance heaters in the areas to be anti-iced or deiced.

d. Temperature sensors at the heated surfaces.

e. Manual or automatic control unit to monitor icing conditions and heat supplied to the surface.

f. Cockpit panel-mounted display to keep the crew advised of the system operation (e.g., warning lights, surface temperature indicator, icing condition warning, power consumption, etc.).

Provisions for redundant electrical energy sources are generally used to provide a high probability of being able to venture into known icing conditions and to ensure safe system operation when icing conditions are encountered.

Aircraft surface areas that may be afforded electrothermal ice protection are shown in figure III 2-1. Of these areas, the windshield is always given anti-icing protection while the remainder of the areas may be given anti-icing or deicing protection, depending on the power available for ice protection and the effects of ice accretion on the component.

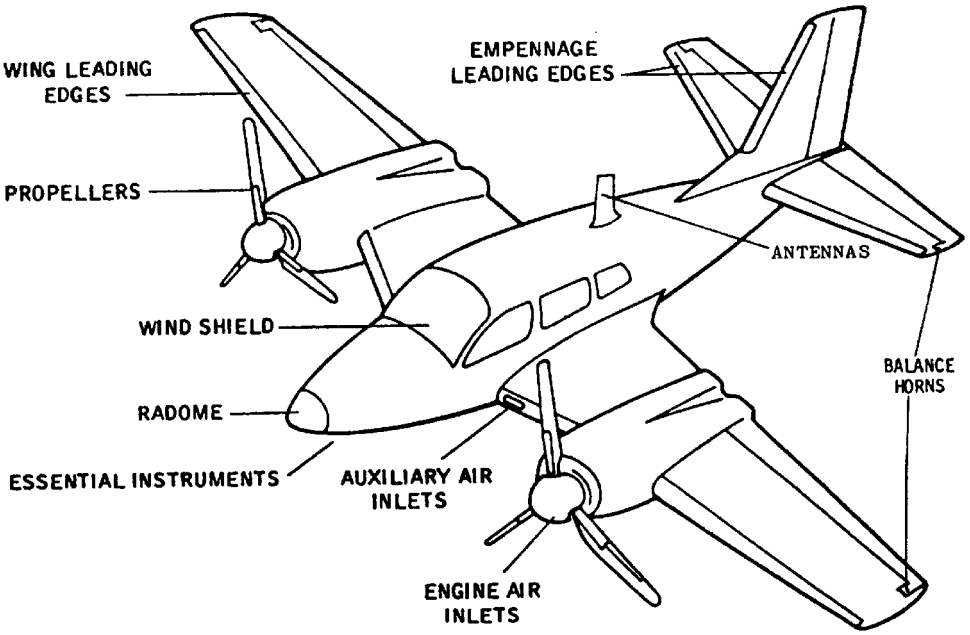

FIGURE III 2-1. AREAS OF AIRFRAME THAT MAY REQUIRE ICE PROTECTION

III.2.2 DESIGN GUIDANCE.

Electrothermal systems use electrical resistance heaters (foil, film, resistance wire, mesh, etc.) imbedded in fiberglass, plastic, rubber, or metal to heat the surface. Figure III 2-2 shows cross sections of typical electrical heaters.

Electrothermal systems are classified as anti-icing or deicing systems. An anti-icing system prevents the formation of ice in a specified area, whereas a deicing system allows ice to buildup and then removes the ice cap.

III.2.2.1 Anti-Icing Systems.

Electrothermal anti-icing systems use electrical heaters to maintain the temperature of the surface to be protected above freezing throughout an icing encounter. Electrothermal anti-icing systems are classified as evaporative or “running wet.”

Evaporative systems, as the name implies, supply sufficient heat to evaporate all water droplets impinging upon the heated surface. The running-wet systems, however, provide only enough heat to prevent freezing on the heated surface. Beyond the heated surface of a running-wet system, the water can freeze, resulting in runback ice. For this reason, running-wet systems must be used carefully so as not to permit buildup of runback ice in critical locations. For example, the heated surface of a running-wet system on a turboprop or turbojet engine inlet should extend into the inlet to the compressor face so that the water runoff will combine with the intake air and not strike cold surfaces where it could refreeze, break off, and possibly damage the engine.

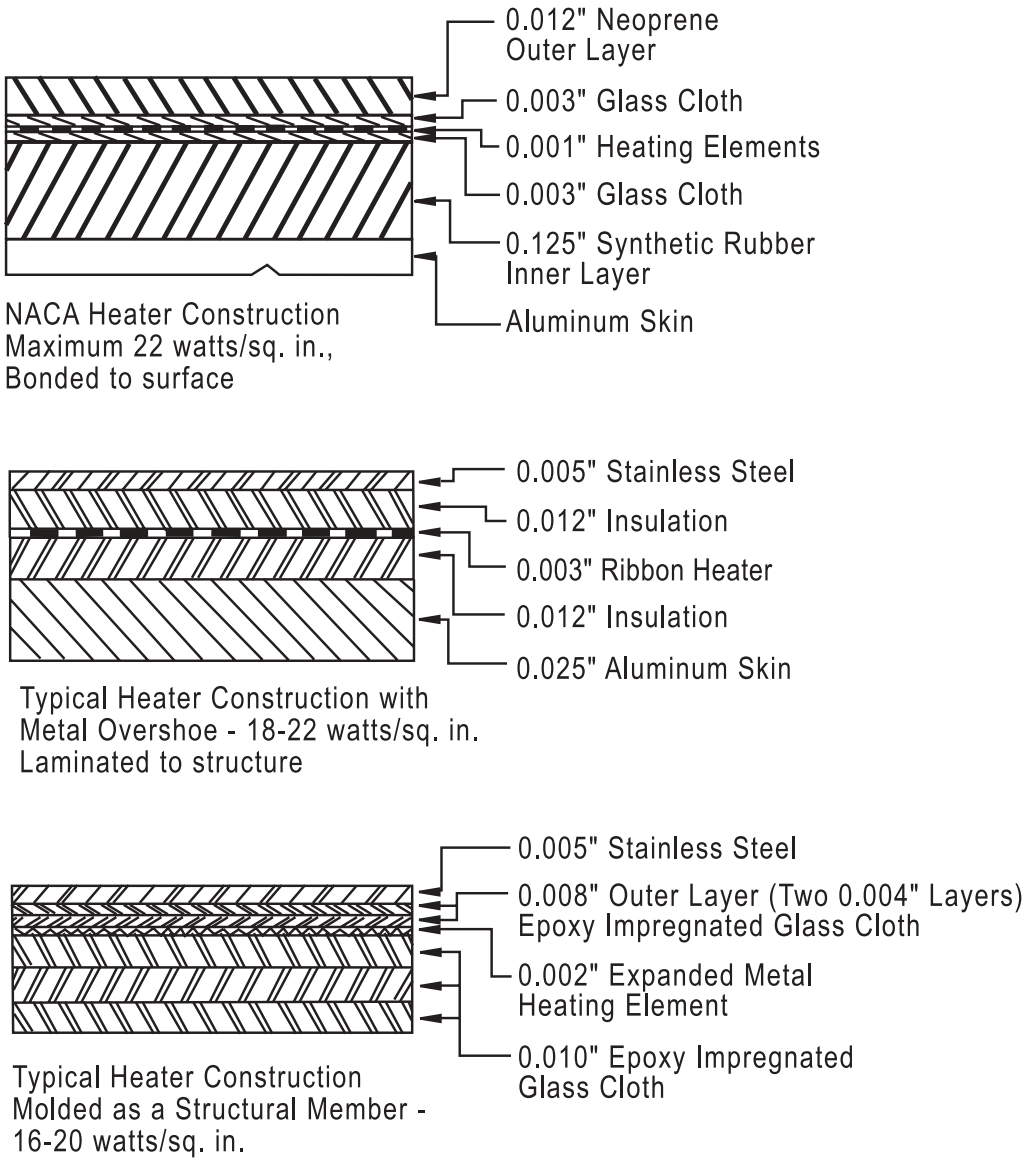

FIGURE III 2-2. CROSS SECTIONS OF TYPICAL ELECTRIC HEATERS

III.2.2.2 Deicing Systems.

In a deicing system, ice is allowed to accrete on the surfaces to be protected and is then removed periodically. Electrothermal deicing systems function by rapidly applying sufficient heat to the ice-surface interface in order to melt the bonding layer of ice; aerodynamic or centrifugal forces then remove the bulk of the ice.

Parting strips may be used in the electrical deicing system to divide the total protected area into smaller, sequentially heated areas. This reduces the total instantaneous power requirement and maintains a stable load on the electrical system. The size of the cycled shedding sections will depend upon the total wattage available and the wattage density required for efficient deicing.

III.2.3 USAGES AND SPECIAL REQUIREMENTS.

For anti-icing, the heat source must remain on throughout the icing encounter. The power requirements for completely anti-icing an airplane using an electrically powered heat source are usually prohibitive. Therefore, the areas generally anti-iced electrically are the windshield, small air inlets, instrument probes, leading edges forward of engine inlets and data probes, and areas remote from any hot air source.

For efficient deicing protection, the correct amount of heat must be supplied where and when needed. If there is too little heat, the ice may not shed as required, perhaps causing large chunks of ice to shed or creating unbalanced rotors on a helicopter. If too much heat is supplied, there can be too much melting, resulting in undesirable amounts of runback ice. It has been found desirable to have the following characteristics in the cyclically heated shedding zones (reference 2-1):

a. A high-specific heat input applied over a short period. This generally requires less total energy than a lower-specific heat over a longer period of time. The high-specific heat input reduces the convective heat losses from the exposed ice surface and conductive losses to the ice and structure and, to a lesser degree, compensates for the uncertainty caused by the large variation in the bonding strength of ice. This requires that the deicing system element on-time (EOT) be optimized as a function of ambient or total air temperature to provide just the amount of heat necessary to melt the ice-to-surface bond layer. If the EOT is too short, deicing will not occur. If the EOT is too long, the deicer will remain at an undesirably high temperature for a significant period of time, perhaps resulting in runback ice.

b. Immediate cessation of heating and rapid cooling of the surface after shedding occurs (this is to greatly reduce runback ice).

c. The heated area should be the minimum necessary to provide adequate coverage for all predicted icing encounters; heat not applied under the ice is dissipated to the airstream. Good insulation between the heater and the supporting structure is required to direct the heat outward to the exposed surface.

d. To produce clean shedding and to avoid runback icing, the proper distribution of heat is required. It is desirable that melting of the ice bond should occur uniformly over the surface; this may require some chordwise gradient to the heat input.

e. The spanwise and chordwise parting strips must prevent any bridging from one shedding zone to another. Even a small strip of anchorage may delay ice from shedding until dangerously large pieces have formed.

f. The cycle “off-time” should be controlled to permit adequate ice accretion for the best shedding characteristics.

The off-time will depend upon the thermal capacity of the shedding zone and the rate at which the surface cools to 32°F (0°C). It will also depend upon the icing rate so that the ice thickness

accumulated is the best for shedding when deicing occurs. The off-time may be tailored to the maximum ice thickness allowed for the application. This may be as short as 1 minute for rotorcraft and as long as 3 to 4 minutes for fixed-wing aircraft.

System requirements for deicing must be considered in two parts: First, the parting strips and dividing strips, and second, the cycled shedding area. The heat input to the strips must provide at least running-wet anti-icing to prevent ice from bridging. For electrothermal deicing, bridging means that an arch of ice remains over the heating element. The ice arch will be attached to a cool surface and the dividing strips can serve as attachment points if not heated. An arch can also form a bridge over the parting strip and be anchored on adjacent shedding zones. Control of the temperature of the strips is desirable both for economy and to prevent overheating. Severe overheating may cause a burnout of the heating elements. Dividing strip widths should be sufficient to accommodate the change in stagnation point with changes in angle of attack. A parting strip width of from 1 to 1.25 inches (25 to 32 mm) should be adequate for most installations.

Aircraft wings with about 30° or more sweep-back will normally use only chordwise parting strips since aerodynamic forces will remove the ice from the shedding zones without the aid of stagnation line parting strips.

Shedding zone power requirements are difficult to determine. Heat transfer rates, aerodynamic forces, and bonding characteristics of the ice (to the surface material) are some of the factors affecting the power requirements. Heat on-times less than 10 seconds require heaters capable of withstanding very high power densities and a large number of cycled areas. Rotorcraft, with their smaller chord airfoils, have used EOT approaching 1 second for warm temperatures. Heat on-times longer than 40 seconds would not result in an appreciable reduction in power density. Shedding zone power density requirements are not appreciably affected by variations in heat off-times. To achieve an even melting of ice throughout the shedding zone, it is desirable to have a uniform power distribution in the region of highest water collection and a decreasing power requirement downstream.

Overheat protection devices may be required for electrical deicing systems. Inadvertent actuation of the electrical deicing system during a period where little cooling takes place could cause burnout of the high wattage density heating pads. The overheat protection device should be temperature sensing so that the systems may be used during ground operation to remove accumulated ice and during takeoff to prevent excessive ice formation. However, the system may not be very effective in ground operation due to lack of airflow to assist shedding.

An electrothermal deicing system may be installed on any existing aircraft by attaching flexible wrap-around heating pads to the structure with an adhesive. The heating pads are fairly thin and may not appreciably affect the aircraft performance. Another method of providing electrothermal ice protection is to mold the heating elements into the leading-edge structure. No aerodynamic performance loss is experienced by this construction method.

The electrical wiring supplying power for the heating pads requires little space and can normally be routed through existing passages within the structure. Generating equipment may be either

engine-driven or auxiliary power source-driven. The required power generator capacity will depend upon several factors: the efficiency of the heating pads, the wattage of the shedding sections, and the number of pads required to be on at any one time. Shedding section cycling should be scheduled to maintain an even power load upon the generating equipment.

In higher-speed aircraft, the rubber heating pads are subject to rain erosion and hail damage. A metal overshoe (erosion shield) (figure III 2-2) will protect the pads and help to even out the heat distribution and prevent surface cold spots. Detracting from the overshoe installation is the loss in heater efficiency and the added weight to the aircraft. The electrothermal system for rotorcraft will generally be constructed in a composite, rather than in a rubber boot, but it will still require an erosion shield. Higher-density deicers are also often made from composites due to higher service temperature requirements.

III.2.3.1 Airfoils and Leading-Edge Devices.

III.2.3.1.1 Airfoils.

The use of electrothermal boot systems for all wing and empennage surfaces is usually not feasible because of the amount of power required and the associated weights of the power generating equipment. Wing surfaces provided with electrothermal systems are usually limited to those requiring special consideration such as surfaces forward of engine inlets. These applications are generally anti-icing, running-wet systems. Deicing is used for many empennage surfaces.

The heater elements are molded into the boot assemblies which are bonded to the wing leading edge. The boot is usually divided into a number of independent heating elements. Each heating element is protected by a circuit breaker and a current sensor. The temperature of the boot is controlled by a thermal control switch attached to the leading-edge wing skin. The thermal control switch senses the skin temperature and opens or closes the power circuit at preset skin temperatures. See figure III 2-3 for a typical wiring diagram. This system is activated continuously when in icing conditions. Also, the temperature may be controlled via an electronic RTD controller, proportional control, or ON/OFF.

III.2.3.1.2 Leading-Edge Devices.

The preceding description of an electrothermal ice protection system for a wing assumed a fixed leading edge. Wings with high-lift leading-edge devices will have the same ice protection requirements but methods of satisfying these requirements will differ and will be more complex.

Leading-edge devices may consist of slats, slots, or flaps. A wing leading-edge slat configuration is shown in figure III 2-4. A slot is similar to an extended slat but is a fixed geometry, rather than being retractable for cruising flight. Leading-edge flaps are hinged plates which are nested against the wing for cruise and played forward for low-speed, high-lift conditions (see figure III 2-5). The fixed wing behind the slat may or may not require protection, depending on geometry, ice accretion characteristics, and time in icing conditions. For each new aircraft, a study should be made of the need for heating this area.

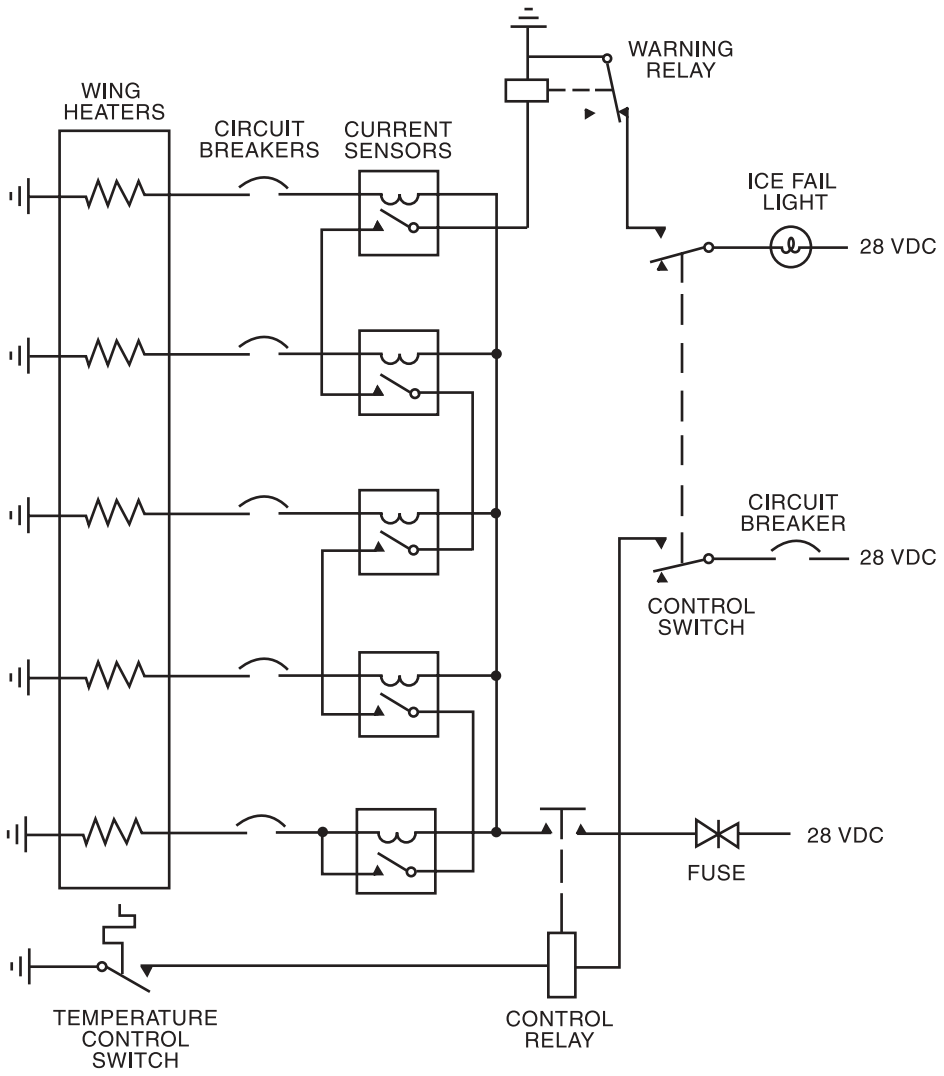

FIGURE III 2-3. ELECTROTHERMAL WING ANTI-ICING SYSTEM

Electrothermal deicing may be applied to leading-edge slats. Difficulty in retraction of the slats may be experienced if ice accretes on the fixed leading edge or if residual ice or runback ice occurs behind the flap.

Leading-edge Krueger flaps may or may not be protected, depending upon the effects of ice accretion on performance. Figure III 2-5 illustrates an unprotected leading-edge flap as might be installed on a transport aircraft. Ice protection requirements for the wing leading edge will remain the same but because of the leading-edge flap installation there will be a reduction in the heated area on the lower surface. Water may run back from the heated leading edge and freeze behind the flap if the leading-edge anti-icing system is not fully evaporative. Also, there will be a small amount of direct impingement. Evaluation of the need for heating the flaps must be made by either an aerodynamic analysis or by flight test.

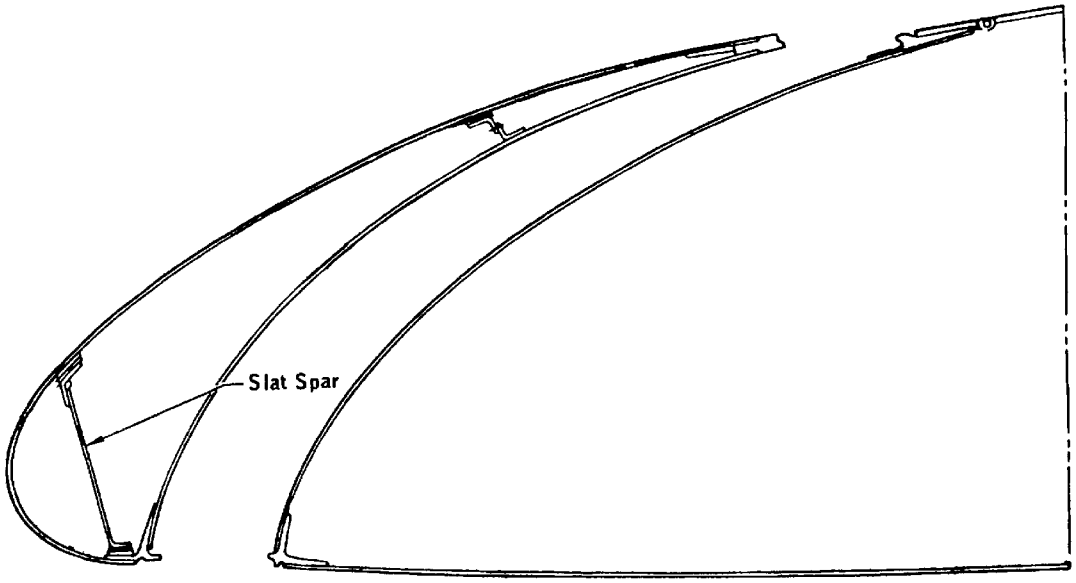

FIGURE III 2-4. TYPICAL WING LEADING EDGE WITH SLAT

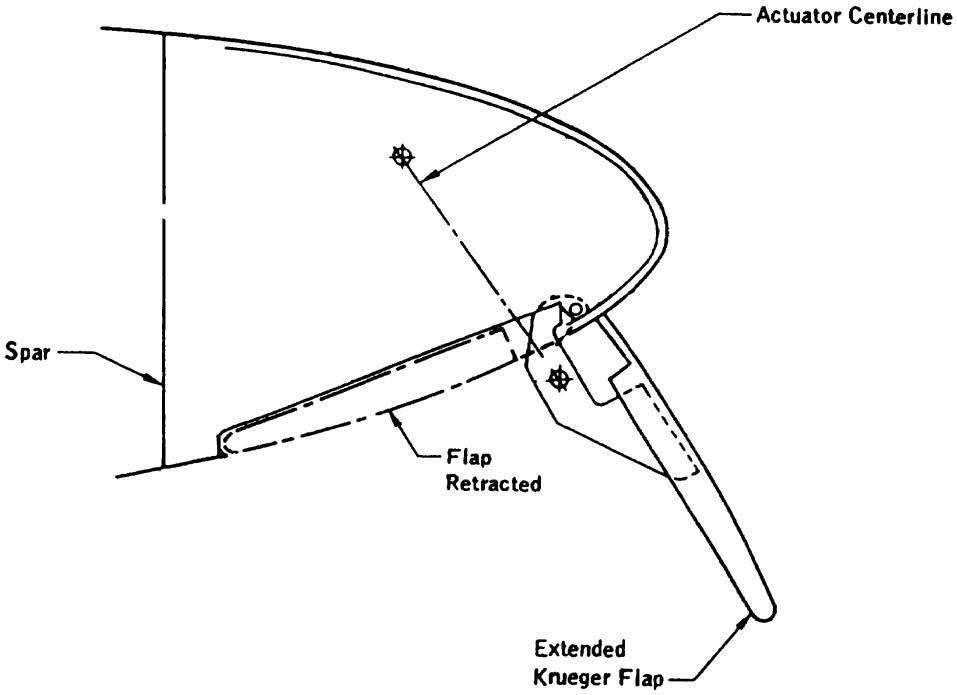

FIGURE III 2-5. TYPICAL WING LEADING-EDGE KRUEGER FLAP

Ice accretion can occur when the flap is extended during takeoff and approach. Figure III 2-6 illustrates the amount of ice that may accumulate on extended flaps during a 30-minute hold in icing conditions. However, no appreciable ice usually accumulates during takeoff, as flaps are retracted about 1 1/2 minutes after brake release. If the flap is unprotected, flight tests should be

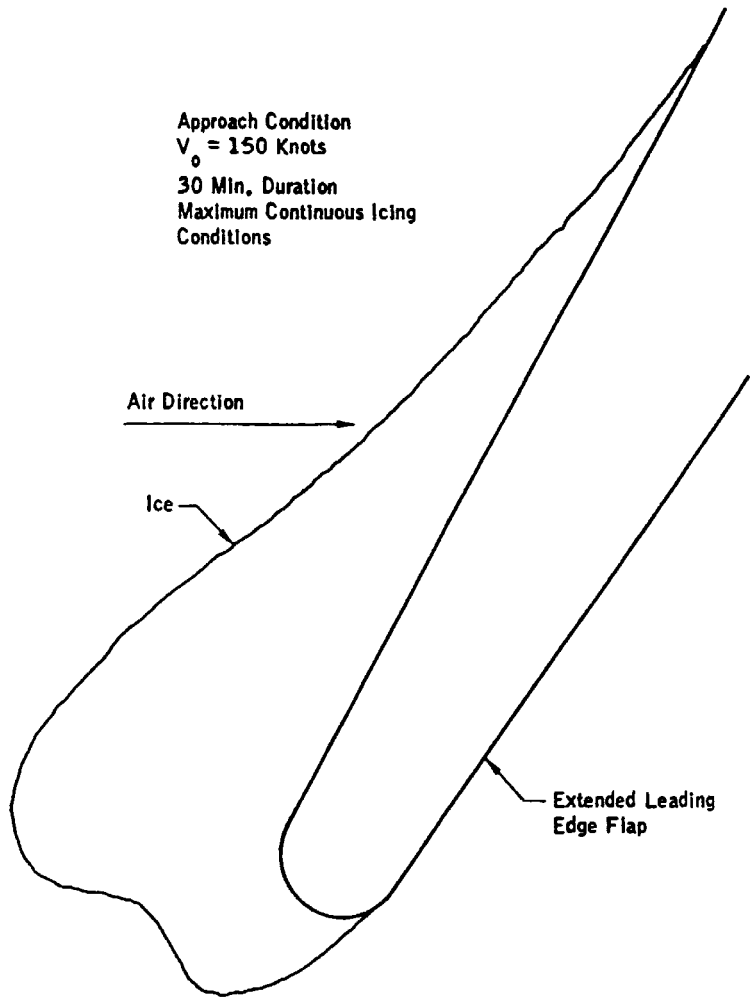

FIGURE III 2-6. ICE ACCRETION ON UNPROTECTED EXTENDED LEADING-EDGE FLAP FOR MAXIMUM CONTINUOUS ICING CONDITIONS

conducted to determine the effects of this ice accretion. One flight test method which may be employed is to simulate the critical-predicted ice shapes with wood or plastic and attach them to the flap. The airplane performance then may be evaluated in clear air.

It should be noted that the extension of either leading or trailing devices changes the air flow around the wing, including sizeable changes in stagnation line location. This will alter the droplet impingement and ice accretion patterns. Trailing-edge flaps sometimes accrete ice. This can generally be determined only from flight tests.

Deicing requirements would be similar to the requirements of a fixed leading edge. Shedding characteristics will probably be different because of the airfoil shape and the aerodynamic forces the ice will encounter. An icing tunnel test program may be required due to the difficulty in predicting shedding forces and impingement.

III.2.3.2 Windshields.

Anti-icing protection is usually provided for the forward-facing windshield panels on both military and commercial aircraft that are required to operate in all weather conditions. The most widely used system is electrical anti-icing whereby electric current is passed through a transparent conductive film or resistance wire that is part of the laminated windshield. The heat from the anti-icing film or resistance wire also prevents internal fogging for most configurations. Electrical heat may also be used to maintain the windshield interlayers (of a glass/plastic-laminated windshield) at or near the optimum temperature for resistance to bird strikes (birdproofing).

Figure III 2-7 shows a typical windshield construction. The thickness of the conductive film or the wire size can be varied to accommodate variation in heating requirements or to heat irregular shapes (references 2-2 and 2-3).

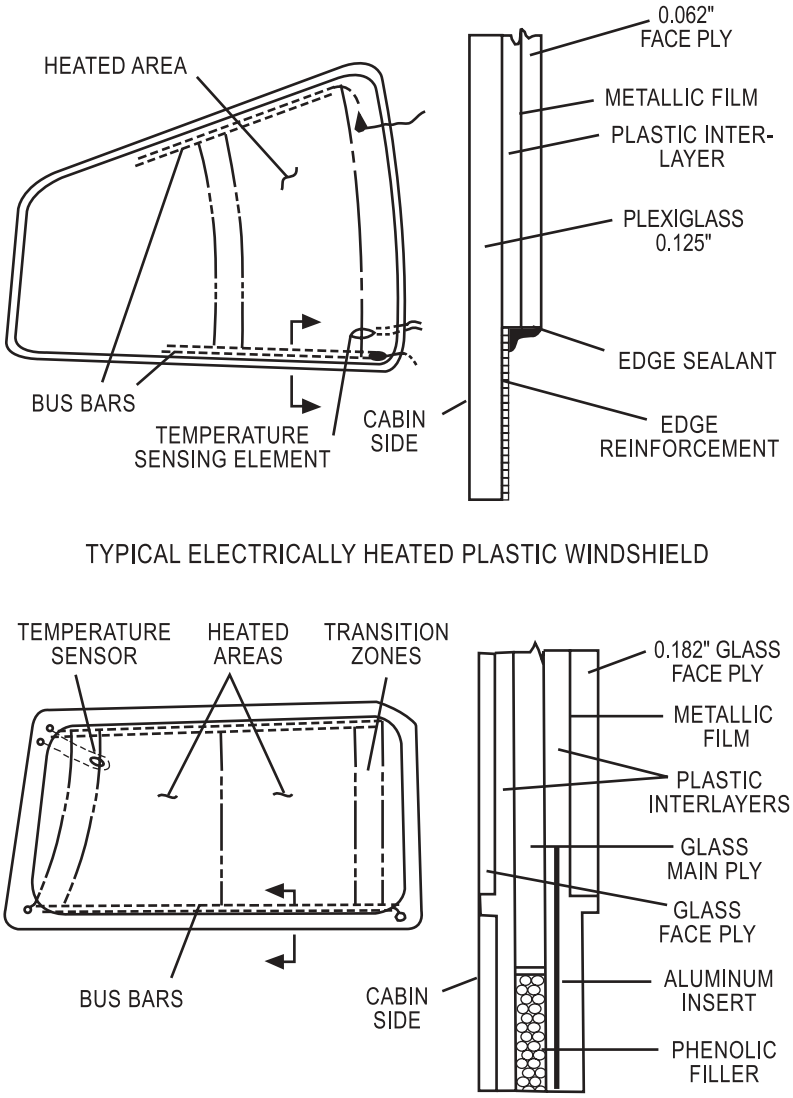

FIGURE III 2-7. TYPICAL ELECTRICALLY HEATED WINDSHIELD CONTRUCTION

The windshield arrangement of a typical multiengine transport is shown in figure III 2-8. Ice protection is needed for the forward-facing windshields (main and center), but not for the side and aft windows which are at minimum angle to the airstream and probably do not collect ice. An alternate arrangement often used deletes the center windshield and increases the size of the main windshields. The center windshield for rotorcraft was considered at one time not to require anti-icing, but operational experience showed that this section should also be protected. In either case, the conductive anti-icing film or wire grid is applied to the inside of the outer ply of glass, as shown in figures III 2-9 through III 2-11. The film usually covers only a roughly rectangular area of the windshield, as nonuniformity of heating and actual "hot spots" become a serious problem with the high-power density heating needed for anti-icing (3 to 4 watts/sq. in. for glass or 5.25 watts/sq. in. for plexiglass). The exterior ply is usually limited to 0.18-inch (4.6-mm) thickness if the surface is glass, 0.06 inch (1.5 mm) if plastic, to avoid excessive internal temperatures. Power supply bus bars and the temperature control sensor are usually located as shown in figures III 2-7 and III 2-9 through III 2-11.

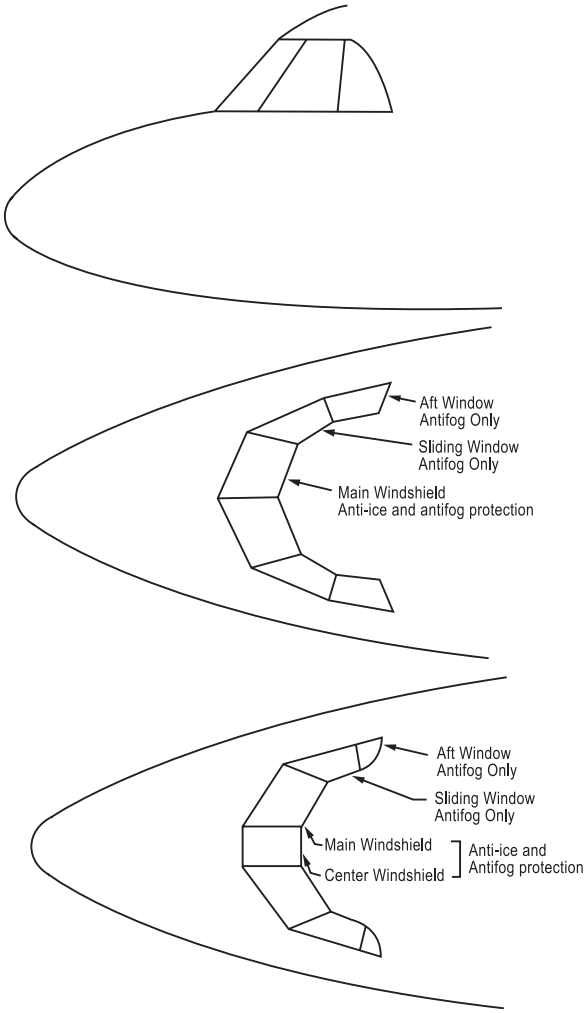

FIGURE III 2-8. TYPICAL WINDSHIELD AREAS TO BE PROTECTED FOR TWO WINDSHIELD ARRANGEMENTS ON MULTIENGINE TRANSPORT

Antifog films, in contrast, are often applied to nonrectangular areas. The low-power densities (1/2 to 1 watt/in^2) used for antifog tend to reduce the problem of "hot spots" and attendant glass breakage problems. For this reason, the arrangement of figure III 2-9 has been used on at least one jet transport. Where the panel in question is nearly rectangular as in figure III 2-10, a single coating may meet the requirements for anti-icing, fog prevention, and maintenance of optimum vinyl temperature. In the configuration of figure III 2-11, the antifog and anti-icing films are never used simultaneously.

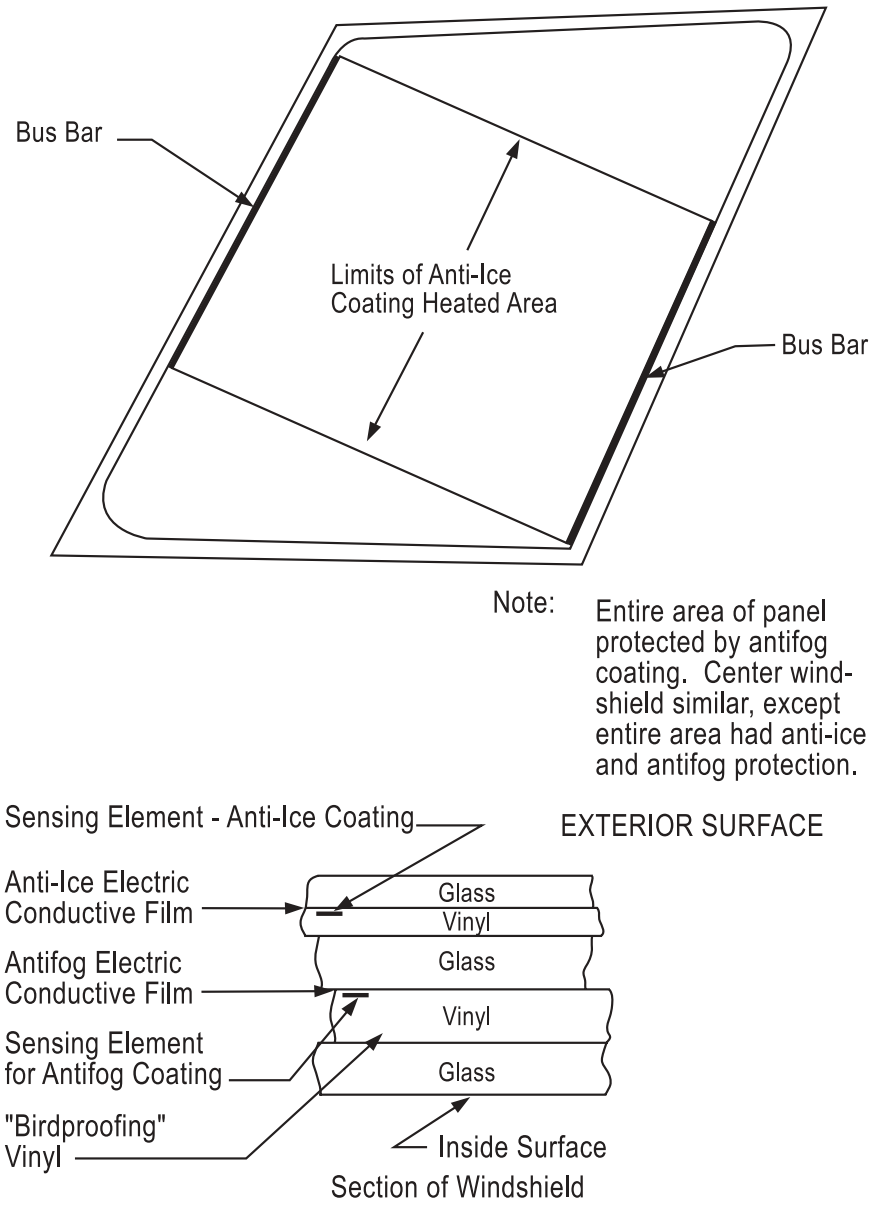

FIGURE III 2-9. TYPICAL MAIN WINDSHIELD SHOWING CONTRUCTION AND LOCATION OF CONDUCTIVE FILMS AND SENSING ELEMENTS
(Five-ply, nonrectangular, birdproof glass windshield)

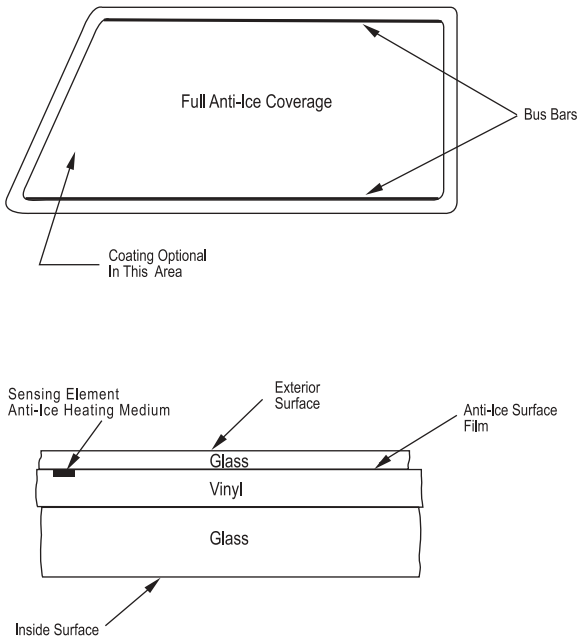

FIGURE III 2-10. TYPICAL MAIN WINDSHIELD SHOWING CONTRUCTION AND LOCATION OF CONDUCTIVE FILMS AND SENSING ELEMENTS
(Three-ply, nearly rectangular, glass windshield)

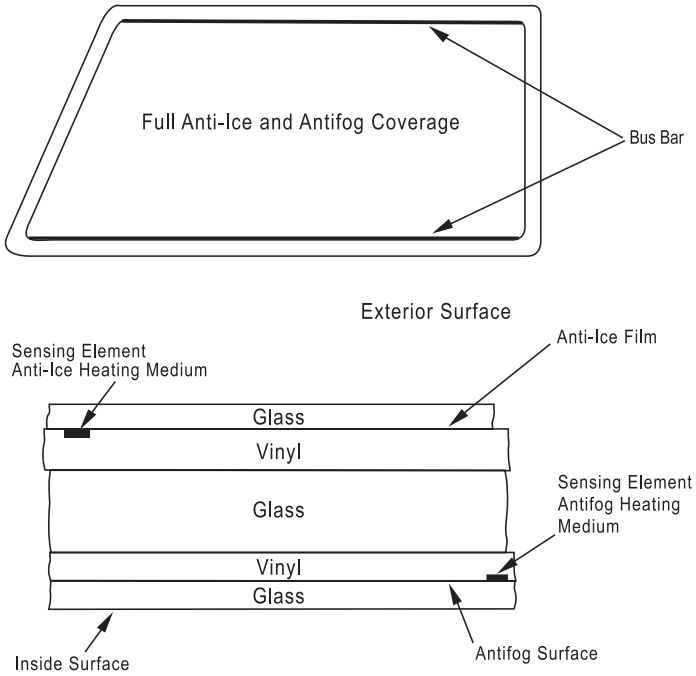

FIGURE III 2-11. TYPICAL MAIN WINDSHIELD SHOWING CONTRUCTION AND LOCATION OF CONDUCTIVE FILMS AND SENSING ELEMENTS
(Five-ply, nearly rectangular, birdproof glass windshield)

Typical heat requirements for a jet transport center windshield are shown in figure III 2-12. For a typical flight profile, a maximum input of 1,800 Btu/hr-ft^2 was found to be adequate. Inward heat losses have not been considered here as analysis shows them to be less than 5%. Calculations were based on boundary layer buildup from the aircraft nose. For windshields that depart abruptly from the fuselage contour, a thickened boundary layer starts at the windshield's base and heat requirements will be higher.

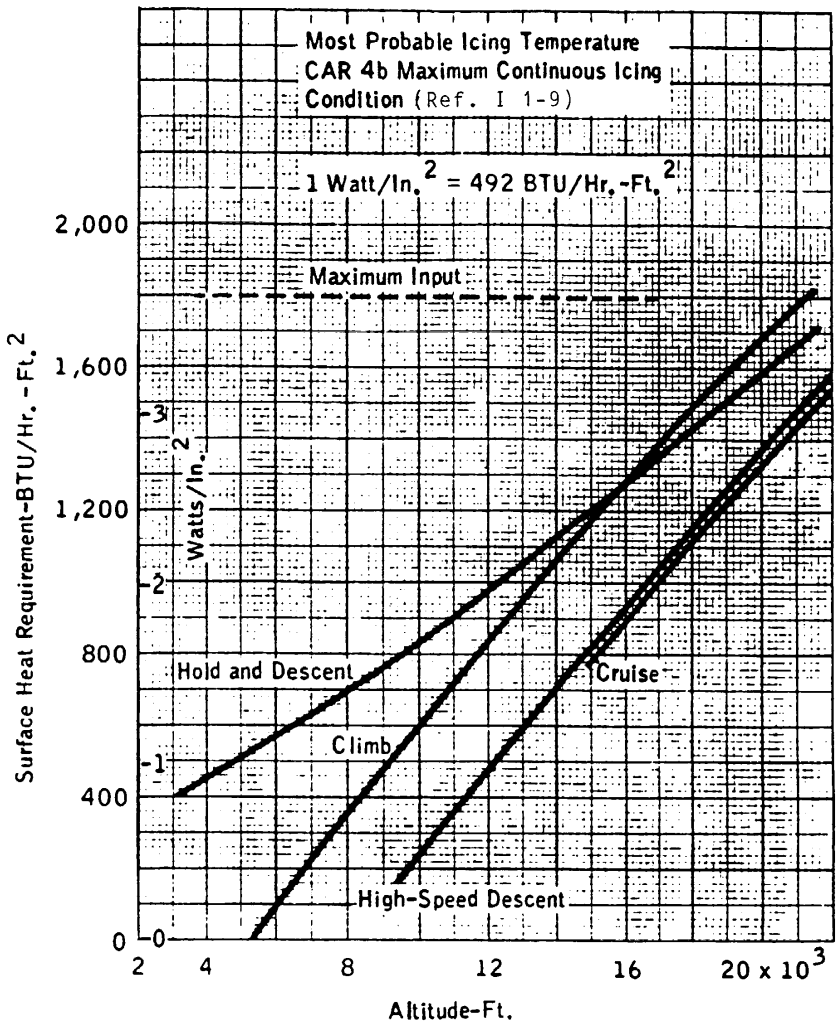

FIGURE III 2-12. TYPICAL ANTI-ICING HEAT REQUIREMENTS VERSUS ALTITUDE FOR CENTER WINDSHIELD PANEL

One of the main problems associated with the use of electrically heated windshields is in-flight breakage caused by thermal stress in the glass. Replacement rates for windshields often are several times as great in winter as in summer. There are two effective approaches to this problem. One is to design the heat input to the minimum possible value. Clear vision is essential at low altitude, but air temperatures associated with icing are not likely to be below 0°F (see chapter I). At higher altitudes where lower temperatures are found, flight through icing

conditions would be made on instruments and some partial obstruction of vision might be acceptable. The nonuniformity of the conductive coating would tend to prevent complete obscuring of the windshield even under marginal conditions. Some transports equipped with high (2,300 Btu/hr-ft^2) and low (1,500 Btu/hr-ft^2) control settings have found no need for the higher setting. However, conformity with FAR 25.773(b) must be observed:

> "The airplane must have a means to maintain a clear portion of the windshield, during precipitation conditions, sufficient for both pilots to have a sufficiently extensive view along the flight path in normal flight attitudes of the airplane. This means must be designed to function, without continuous attention on the part of the crew, in... (ii) the icing conditions specified in para. 25.1419 if certification with ice protection provisions is requested."

The Far 25.1419 atmospheric conditions are given in FAR Part 25, Appendix C. FAR 23 requirements are less specific, but FAR 29 requirements are essentially the same as for FAR 25.

A second approach (which can be used in conjunction with the first) is to employ a power modulating control. Recent advances in electronic switching devices have made this an attractive method of control. Mechanical switching (use of a transformer, relay, and power contactor) may result in large transient currents and temperature differentials that adversely affect windshield service life.

Successful design of a windshield having electrical heating requires careful integration of all factors involved. The most important are providing good coating uniformity (use of nearly rectangular areas), limiting heat input to the minimum acceptable level and, if possible, using a modulating control to eliminate cyclic thermal stresses. Methods of calculating the heat required and temperature control setting are shown in chapter V together with a calculation method to determine temperature of the interlayer.

III.2.3.3 Engine Inlet Lips and Components.

III.2.3.3.1 Inlet Types.

The method in which ice protection is used in turbine-powered aircraft is dependent on inlet design. The major differences in ice protection system needs are due to the two inlet designs termed "contoured" and "noncontoured." A contoured inlet duct is defined here as a duct that has sufficient internal surface curvature and causing sufficient redirecting of inflowing air such that water particles ingested will impinge directly on the duct surface. On the other hand, many inlet designs used for modern turbine-powered aircraft have a mild contour such that the incoming air is not significantly redirected and the air travels straight into the engine. In this case, the inlet duct walls are not prone to direct water droplet impingement. These inlets will be defined as noncontoured and ice protection against directly impinging water under icing conditions is not needed.

A typical example of noncontoured inlets is the turbofan-powered commercial transport aircraft with externally mounted engines. Contoured inlet aircraft are typically turboprop-powered

aircraft or aircraft with internally mounted engines. For many of these aircraft, the duct contour causes significant water droplet impingement, making ice protection a requirement for these areas. In many cases, electrothermal deicing provides the best combination of cost, weight, operational features, manufacturing ease, and power requirements for inlet duct ice protection, provided that the engine can tolerate the shed ice.

For most turbine-powered aircraft, engine inlet leading-edge surfaces require some type of ice protection. Electrothermal deicing provides effective inlet leading-edge ice protection and usually draws a relatively low amount of electrical power. Electrothermal anti-icing systems require more power than deicing systems but insure a minimum of engine ice ingestion, provided that runback icing is avoided.

III.2.3.3.2 Power and Cycling.

Numerous power and timing combinations are available that can provide satisfactory ice protection. Alternating current obtained directly from aircraft alternators is typically routed through one or more electrical heating elements. Two fundamental parameters of electric power application are power density and duration. Typical power density ranges used in present day aircraft deicing applications are from 10 to 30 watts per square inch (1.5 to 4.7 watts per square centimeter). Two different methods of applying power to the deicing device are (1) holding power density constant and varying the duration—with the duration determined by ambient condition sensing or (2) holding the time base constant and varying the power density (by varying the voltage or changing the total system resistance)—with power density determined by the ambient condition sensing.

Regardless of which method is used, the success of a deicing system in an inlet is heavily dependent on rapid heat-up and rapid cool-down. The desire to have rapid heat-up and cool-down grows out of the need to minimize the melting of ice and hence the forming of water during the deicing cycle. By forcing the temperature of the surface to rise quickly, the ice will not gradually absorb heat, but instead, the frozen ice/surface interface will separate, allowing the ice particle to be swept away by the airflow, with the departing ice taking the small amount of melted water along with it.

The more rapidly the surface cools to below freezing the sooner the reformation of ice will commence, preventing the runback of a significant amount of liquid water that could freeze onto unprotected areas. The potential problems of runback icing are dealt with in section III.2.10. A typical heating strategy to help alleviate the hazardous buildup of runback ice is to divide the deiced surface into several streamwise zones and apply power to each zone separately. By alternating the on-cycle from zone to zone and going from front to back, runback water can be shed as ice or chased back to nonhazardous areas.

III.2.3.3.3 Materials.

Electrothermal deicing heater elements are typically fabricated in one of several designs. The element may be built as an add-on pad type of device or it may be built in as an integral layer within the actual aerodynamic surface. If the heater is the bond-on pad type, it may be applied to

either the front (air-wetted) surface or on the backside of the aerodynamic surface, out of the air stream. If the heater is mounted on the external surface, consideration must be made for resistance to impact from foreign objects and from lightning strikes.

Effects of changes in heat transfer characteristics should be accounted for when the decision is made to install a heater system externally, internally, or integrally. The installation location and consideration for impact resistance will usually have a bearing on whether the heater element is embedded in a flexible or a rigid material. In either case, the material must be electrically nonconductive and completely encase the heater element to insulate the conductive element electrically. For embedded heaters, an overtemperature sensor may be placed behind the heater to provide thermostat control and avoid heater damage by overheating.

III.2.3.4 Turbofan Components.

Ice protection for turbofan engine components is commonly provided by hot air methods (section III.5.3.4). However, electrothermal deicing or anti-icing may be easily applied to inlet guide vanes.

III.2.3.5 Propellers and Spinners.

Propeller and spinner (nose cone) ice protection is employed for three reasons: (1) leading-edge ice formations may cause a propeller efficiency loss, (2) unsymmetrical shedding of ice may result in propeller unbalance, and (3) large pieces of ice shed from the propeller or spinner may be ingested by the engine on turboprop aircraft.

Electrothermal deicing may be installed on the external surface of a propeller without appreciably affecting its performance. Coverage should be determined by analytical or experimental means; it may be approximately 15 percent of chord on the suction surface and approximately 30 percent on the pressure surface. The maximum propeller radius at which appreciable ice forms is related to the increase in aerodynamic heating with increasing radius and also to centrifugal forces and revolutions per minute. Protection is sometimes extended no further than about 30 percent radius; however, in some instances, ice may accrete farther outboard with very detrimental effects on propeller performance since the propeller is most heavily loaded in the tip region. Careful selection of the protection coverage extremes is warranted in these cases. The power to the heating pads is supplied through slip rings at the propeller hub. Installation of the heating element on the interior of the propeller would protect the heating elements from damage, but the loss of efficiency and the difficulty of repair make the external system more feasible. An example of the construction of an external electric heater for a propeller is shown in figure III 2-13. The outer ply of the propeller heater must be of a material which is rain erosion resistant and not too vulnerable to hail damage.

Propeller thermal deicing requirements will vary, depending upon propeller diameter, rotational speed, and aircraft forward velocity. The watt density and coverage are usually determined by the boot manufacturer. For composite blades, consideration must be given to runback due to the slower cool-down rate of the composite as compared to aluminum. This is usually accomplished by using a shorter on-time at warmer temperatures.

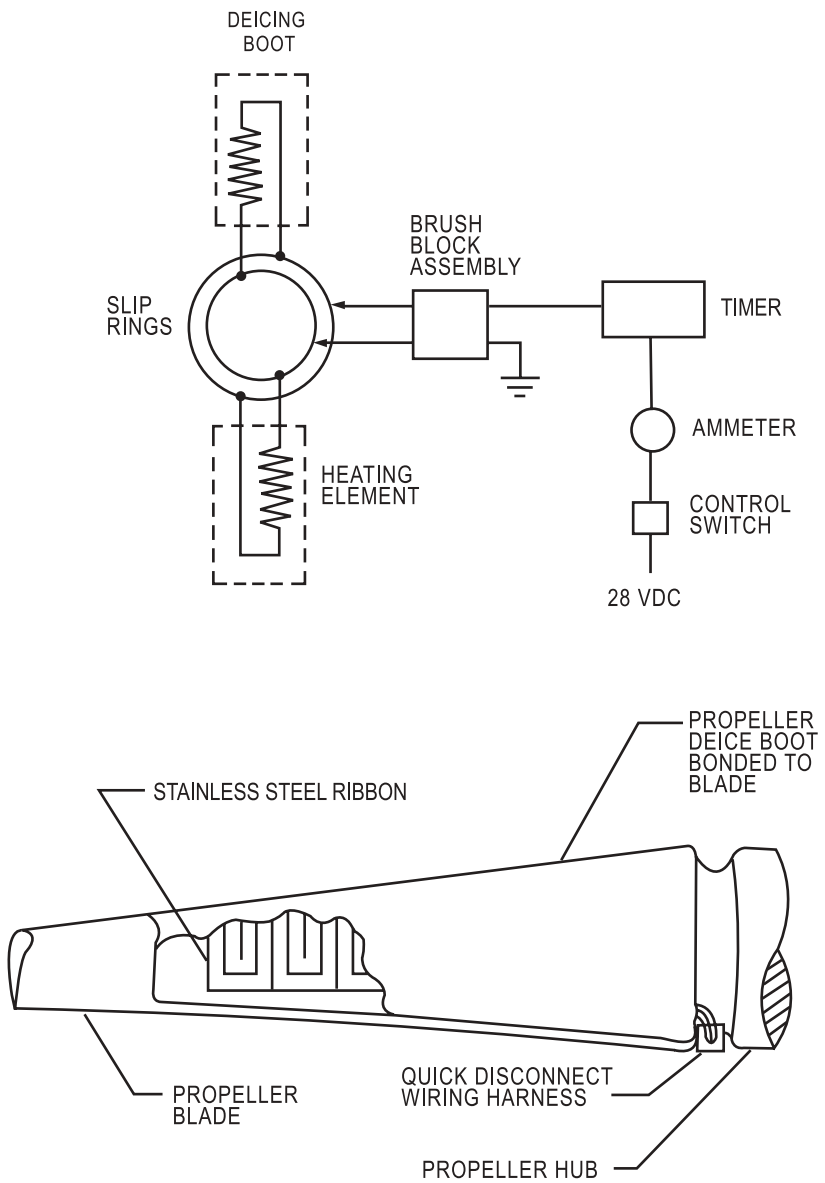

FIGURE III 2-13. ELECTROTHERMAL PROPELLER DEICING SYSTEM

Shedding of ice from propellers should be equal from each blade of a propeller to prevent unbalance. Timing sequences are usually established so that only one propeller is heated at a time. Also, the frequency of shedding should be scheduled to prevent large pieces of ice from forming, as they may cause damage to the aircraft when they are shed. Fuselage skin damage due to ice shed in the propeller plane should be considered. In some cases, a protective shield may be desirable.

Ice protection for propellers and, to a limited extent, spinners of turboprop aircraft is commonly provided by the electrothermal method. A typical system of this type is illustrated in figure III 2-14 and is described in detail in reference 2-1. In this particular system, continuous (running-wet) heating is provided for the forward portion of the spinner while cyclic heating is

provided for the aft portion of the spinner, the spinner islands, and the propeller blade leading edges (to 30 percent radius). These are the areas from which shed ice would have the greatest tendency to enter the engine.

In the system illustrated, the distribution of power to the forward (anti-icing) portion of the spinner is shown in figure III 2-14. Power to this area is varied in steps from 3.5 to 8 watts/in^2. The watt densities supplied to the cycled areas are 11 watts/in^2 for the aft portion of the spinner and 13 watts/in^2 for the spinner islands and propeller blade "cuffs." Heat on-time for these cycled areas is 20 seconds and the total cycle time is 160 seconds (heat off-time is 140 seconds).

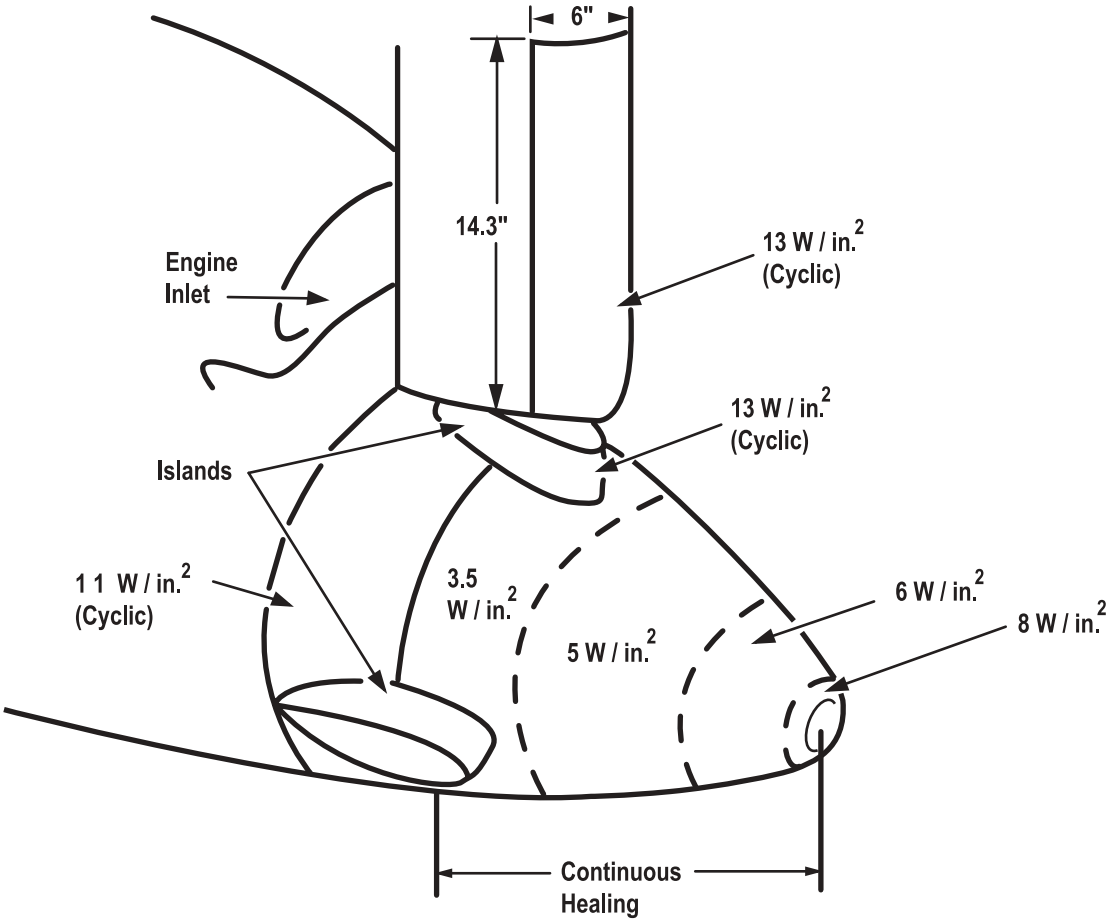

FIGURE III 2-14. TYPICAL PROPELLER AND SPINNER ICE PROTECTION FOR TURBOPROP AIRCRAFT

For other configurations, the same principles may be applied to obtain satisfactory protection. Other methods have been used in the past, such as fluid and hot-air ice protection, but have fallen into disuse because of installation difficulties, as compared to the electrical system.

III.2.3.6 Helicopter Rotors and Hubs.

The main components of a typical rotorcraft rotor blade electrothermal deicing system are shown in figure III 2-15. These include main and tail rotor blades with electrothermal heaters embedded in the leading edges, a system controller, main and tail rotor sliprings, system power stepping, fault monitoring, ambient temperature sensor, and an ice detector rate meter subsystem.

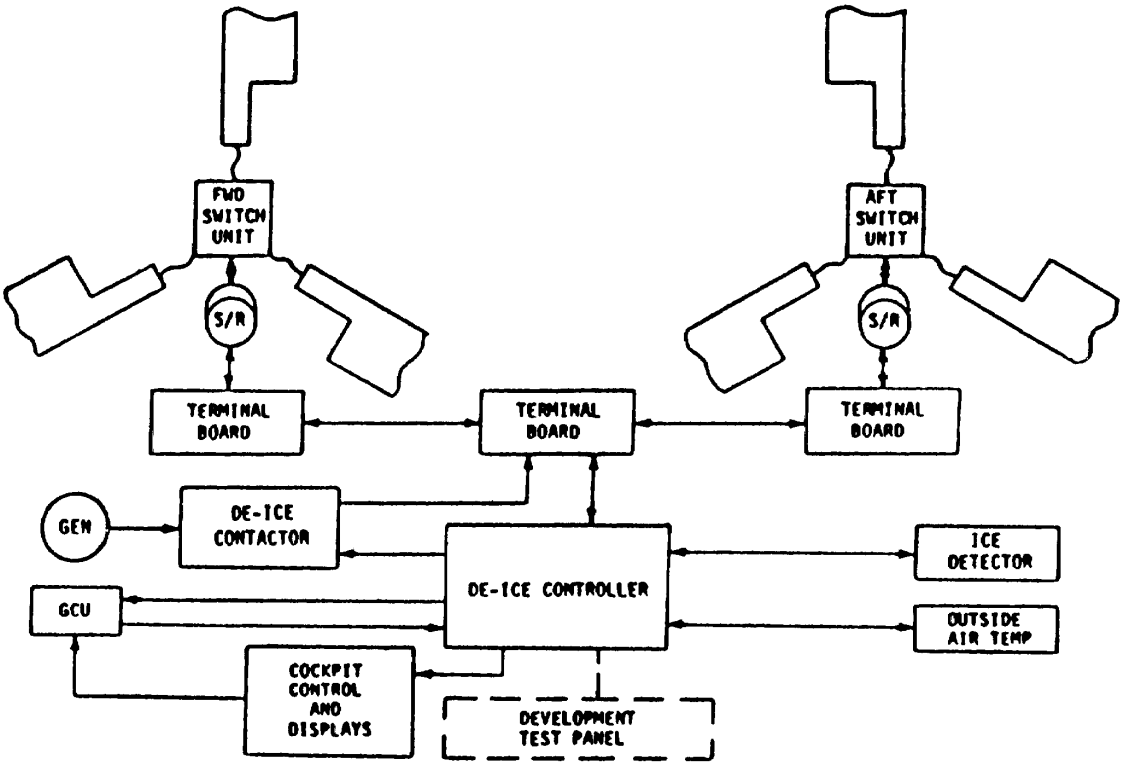

FIGURE III 2-15. MAIN COMPONENTS FOR ROTOR DEICING SYSTEM

The electrothermal deicing system installation for rotorcraft can be divided into the following subsystems:

- Electrical heaters
- Deicing power supply
- Power distribution
- Deicing system controller
- External environment sensors
- Ice detection
- Ambient temperature sensing

Tilt rotor aircraft spinner protection (shown in figure III 2-15) and articulated rotor droop stop protection can also be provided by electrothermal systems.

III.2.3.6.1 Heater Elements.

Several variations in the design of electrical heating elements are in use today. Concepts for locating the heater elements are spanwise (elements from tip to root) or chordwise (around the leading edge), with power density variations in chordwise and/or spanwise directions. Figures III 2-16 and III 2-17 show examples of these element configurations. The chordwise heaters are generally activated in sections from tip to root, while the spanwise heaters are generally activated around the chord starting at the stagnation region. Combinations of these two arrangements are in use.

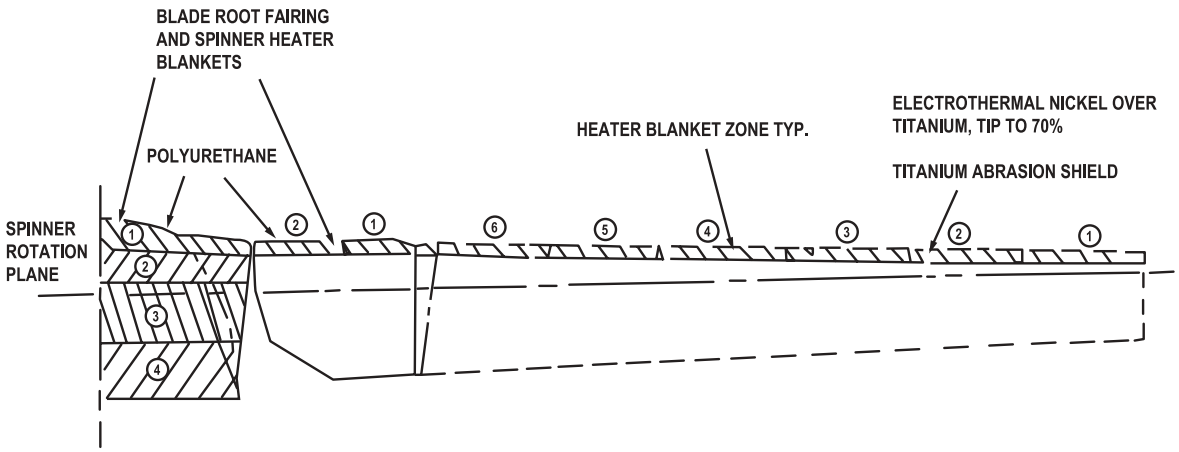

FIGURE III 2-16. SPANWISE HEATER ELEMENT ARRANGEMENT

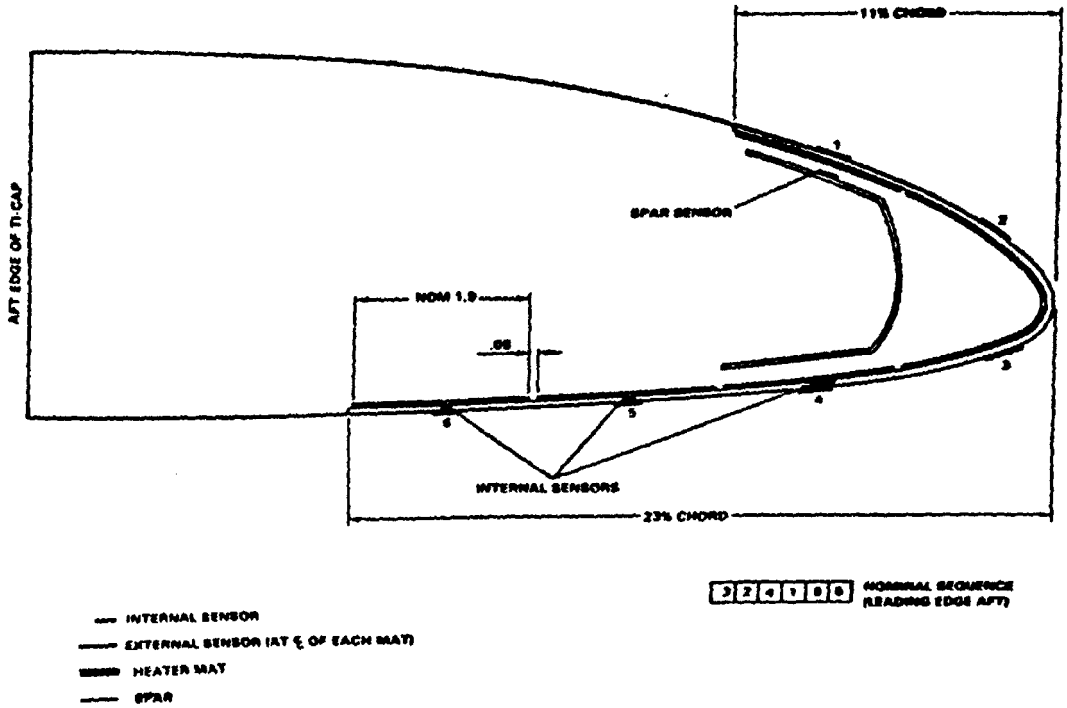

FIGURE III 2-17. CHORDWISE HEATER ELEMENT ARRANGEMENT

The heaters may be constructed of wire conductors woven into a carrier, etched foil bonded to a carrier, conductive composite material, or sprayed metallic coating applied to a contoured surface. A suitable dielectric layer is incorporated on each side of the heater to provide electrical insulation from the erosion cap or spar. The blade is generally fabricated with the heater embedded in the leading-edge assembly. Some development aircraft have used add-on deicing boots which are fabricated from a heater mat and suitable dielectric. These add-on boots are bonded to the exposed leading-edge surface. This is a less expensive approach; however, it affects aerodynamic performance. Heater blanket materials must be evaluated for stress-strain properties, material temperature limits, fatigue limits, and repairability.

The extent of rotor blade coverage can be determined through analysis and test. Since the shedding G forces are much lower for a helicopter rotor than for propellers, coverage usually extends from 20 to 99 percent of the rotor span and to about 15 and 25 percent of the upper and lower chord, respectively. Once the area requiring protection is determined, the area is divided into zones to minimize the power necessary at a given time to provide effective protection. Most ice accretion occurs at the leading edge (around the stagnation region) along the span, with the largest proportion at the outboard areas, generally between 40 and 80 percent of the span. This is due to greater local collection efficiencies due to higher rates of impingement. Centrifugal force and kinetic heating effects tend to reduce the ice accretion rate near the rotor tip.

The rotor blade local heat requirements in each heater area can be determined by analysis and testing. Variations in the local blade heating can be accomplished by changing the heater resistance (this changes the local power density) and adjusting the length of time power is applied to a specific zone. Power to the rotor deicing heaters can be supplied from the main aircraft generating system or from a dedicated electrical supplying.

The following considerations need to be addressed when evaluating an electrothermal deicing installation:

- Reliability
- Overheat protection
- Power required/available
- Redundancy requirements
- Fault detection
- Repairability
- System check
- Ground check
- System saturation
- Electromagnetic interference

Several flight occurrences need to be considered in designing electrothermal deicing blankets for rotor blades. These include erosion; lightning strike capability; impact of rain, hail, insects, and varying airloads caused by centrifugal forces; blade bending; and the cyclic expansion and contraction loads due to heating and cooling.

III.2.3.6.2 Deicing Power Supply.

Deicing power is generally supplied from the aircraft's main generator/alternator system. In some configurations, however, use of a dedicated power supply source may be a better choice, particularly where a decision on use of constant frequency versus variable frequency may be an influencing factor. With any choice of power supply, however, the electrical system must be sized for the load demand of the deicing system, which in many cases may be equal to or greater than the total of all other aircraft electrical load requirements. Additionally, the redundant power source requirement (if the requirement is specified) must be taken into account (i.e., does the rotor deicing system continue to function with one generator/alternator out?).

III.2.3.6.3 Power Switching and Distribution.

Deicing power must be transferred from a stationary system (i.e., generators, alternators, power switching unit) to the rotating system (i.e., rotor head). The most common system employed to date is the rotor shaft slip-ring assembly. The power to individual heater element zones is generally directed by a mechanical or solid-state switching device (or stepper), located in the rotor head. The device transmits a power pulse to each heater element in a predefined sequence and on-time determined by the main deicing controller.

III.2.3.6.4 Deicing Controller.

The deicing system for main and tail rotors utilizes a deicing controller, which can be designed to provide automatic control, manual control, or both. Typically, an automatic controller processes signals from the outside air temperature (OAT) sensor (or from an icing rate sensor) to establish the heater element on-time, while the element off-time is determined via the signal from the icing rate system. The controller automatically sequences power to the blade, adjusting the cycle timing based on ambient conditions. The automatic controller may also examine deicing system malfunctions and attempt to maintain system function for as long as possible by bypassing the failed element and signaling the cockpit.

A manual controller establishes element on-times and off-times based on pilot selected switch settings. Typically, as a minimum, the pilot selects the OAT range at which he is operating (i.e., 0° to -10°C) and his estimation of the icing severity (trace, light, moderate, severe). Changes in ambient conditions are reflected via changes in the switch settings. Manual control of element on-time is not recommended for composite rotor blades, to prevent possible overheating of blade resin.

Many controllers can operate in either an automatic or a manual mode, with the manual mode typically available as a backup to the automatic system. Additionally, protective circuitry can be incorporated into the controller. This circuitry can alter or shutdown the deicing power sequence in the event of an electrical system failure while providing system status information to the helicopter instrument panel. A failure, as detected by the controller check circuitry, will result in automatic power sequence shutdown or alteration of the cycle sequence and the appropriate cockpit fail signal.

The controller can also include built-in test circuitry. This circuitry, when supplied with the proper signals, can verify correct system operation. Usually, the system is tested on the ground prior to flight and can be activated at any time by the pilot.

III.2.3.6.5 External Sensors.

A signal from an outside air temperature (OAT) sensor is used, either independently or with other system parameters (i.e., icing rate or LWC) to control the heater element on-time schedule. To insure accurate temperature readings, the sensor should be protected from ice accumulations either thermally or through the use of shielding. Additionally, the OAT sensor location must be selected so that fuselage skin temperatures or other external conditions cannot influence the temperature readings.

Icing information is obtained through the use of an ice detector or an ice accretion rate system.

One of the primary signals to the deicing controller is the ice indication/ice rate input which is generally used to initiate the deicing sequence and determine the heater on and off-times when the deicing controller is in the automatic mode. The trigger signal for the deicing sequence is generally set to activate at a predetermined value of ice rate or at a reference ice accretion obtained from the ice detector rate or ice detector count. Helicopters have special problems in ice detection and rate measurement; see section II.1.4.2. In determining the reference ice thickness for deicing sequence initiation, several topics should be considered such as the rate of torque rise, the size of shed ice which impacts other aircraft components, and the ice thickness which results in satisfactory shedding (no runback).

Further information on ice detectors commonly used with electrothermal ice protection systems is found in sections II.1.3.3 and II.1.3.5. Visual means also exist for ice detection and ice thickness indication.

III.2.3.7 Flight Sensors.

Any large aircraft has small components that accumulate ice if not protected. Typical examples are pitot tubes and angle-of-attack indicators. The need for ice protection of these components can be determined by answering the following questions:

a. Will ice accumulate on the object in question and in what amount?

b. Will this accumulation adversely affect the component's function?

c. If the component's function is affected, will this have an effect on safe flight of the aircraft?

d. What is the effect of ice shedding from the component on other components such as the engine inlets? Will ice shedding affect engine operation?

The current practice for small, critical components is the application of electrical heat to the critical area.

Static ports located on the fuselage (if suitably far from the nose of the aircraft) usually have not needed protection. In any case, where ice protection is provided for small components, the effect of a single failure should be considered. In the case of pitot tubes, for example, if the pilot's pitot tube fails, the copilot's may be used.

III.2.3.8 Radomes and Antennas.

III.2.3.8.1 Radomes.

Electrical systems are not applicable to the ice protection of radomes because of the interference from the heating element (reference 2-5).

III.2.3.8.2 Antennas.

Ice protection for antennas, if provided, can be of the electrothermal type. General practice has been not to provide such protection, but large antennas such as those on the U.S. Army EH-60A helicopter are protected to avoid possible breakage due to large ice buildups. In some cases, flexible antennas improve the self-shedding of ice.

III.2.3.9 Miscellaneous Intakes and Vents.

General practice has been to provide no protection for flush inlets and vents. Although detailed studies must be made for each new application, it is usually found that the flush inlets will not close completely in icing, therefore, protection is not provided. Static ports located on the fuselage (if suitably far from the nose of the aircraft) usually have not been protected. Inlets for air conditioning systems may or may not be protected depending on whether ice formed on the inlet would shed into the heat exchangers or turbo-compressors and cause damage. In any case, where ice protection is provided, it will probably be of the electrothermal type.

III.2.3.10 Other.

Other small components of an aircraft that accumulate ice if not protected are wing fences, stabilizer mass balance "horns," tip tanks, and wheel covers. The need for ice protection for these components can be assessed by answering the questions listed in section III.2.3.7. For many of these miscellaneous components, electrothermal is the only practical ice protection method.

III.2.4 WEIGHT AND POWER REQUIREMENTS.

The effect of an installed electrothermal ice protection system on the weight and power requirements of some typical aircraft is presented in table III 2-1. From these data, the actual aircraft performance penalties can be predicted. These numbers are representative of what would be required; however, a more detailed analysis would be necessary to determine them more precisely for any particular airplane (reference 2-1).

TABLE III 2-1. WEIGHT AND POWER REQUIREMENTS FOR ELECTROTHERMAL ICE PROTECTION SYSTEMS (for three typical aircraft (reference 2-1))

Aircraft	Aircraft Component	System Type	Weight (lb.)	Power (kW)	Power (hp)
"A" (Twin-Engine Recip.)	Windshield	Elec. Anti-icing	10	1.5	2.0
	Propeller	Elec. Deicing	10	0.8	1.1
		Generator (a)	15		
	Total		35	2.3	3.1
	Wing and Tail	Elec. Deicing	40	6.8	9.1
	Windshield Elec.	Anti-icing	10	1.5	2.0
	Propeller	Elec. Deicing	10	Deiced with wing and tail	
		Alternator (b)	20		
	Total		80	8.3	11.1
"B" (Single-Engine Recip.)	Windshield	Elec. Anti-icing	10	1.4	2.0
	Propeller	Elec. Deicing	5	0.6	0.8
		Generator (a)	15		
	Total		30	2.0	2.8
	Wing and Tail	Elec. Deicing	45	9.3	12.5
	Windshield	Elec. Anti-icing	10	1.4	1.9
	Propeller	Elec. Deicing	5	Deiced with wing and tail	
		Alternator (b)	20		
	Total		80	10.7	14.4
"C" (Light Twin Jet)	Wing and Tail	Elec. Deicing	45	11.7	15.7
	Windshield	Elec. Anti-icing	10	1.5	2.0
	Engine Inlet	Elec. Anti-icing	10	3.8	11.8
		Alternator	20		
	Total		85	22.0	29.5

Note: This table is based on pages 4.1-46 thru 4.1-48 of ADS-4.
(a) 15 lb. added for increase in generating capacity (28-volt generator + transformer).
(b) 20 lb. added for increase in generating capacity (115-volt alternator substituted).

III.2.5 ACTUATION, REGULATION, AND CONTROL.

Automatic initial actuation of electrothermal systems is discouraged for several reasons which generally apply to any type of ice protection system. First, automatic actuation decreases the reliability of the system. It could fail to be turned on or be turned on when not required, reducing heating element life and wasting energy. Second, the pilot needs to determine if the system is functioning properly. His attention may not be drawn to a system that automatically actuates. Third, the complexity of the system is greater. If a manual backup is required, then an additional annunciator is required to show the primary system failure. More components require more frequent replacement and higher maintenance cost.

Having emphasized the dangers of automatic initiation, it must be stated that once activated, automatic regulation and control are very valuable in reducing crew workload. Annunciator lights or a CRT display should then be used to inform the pilot of system status or faults.

III.2.6 OPERATIONAL USE.

III.2.6.1 Anti-Icing Systems.

Anti-icing systems should be turned on as soon as icing conditions are encountered. If too much ice has accumulated, the system will be required to deice the surface and the watt density is usually too low to do this quickly.

These systems also need to be tested prior to flight into known icing conditions. In some cases, an annunciator light will indicate when the system is functioning properly. In other cases, the aircraft's ammeter or power meter are observed for reading changes when the system is turned on or off.

III.2.6.2 Deicing Systems.

Deicing systems do not have to be turned on until after ice has started to accumulate on the surface protected. The watt density is sufficiently high enough to remove accumulated ice. However, undue delay can result in the formation of ice over the parting strips, making shedding more difficult. Furthermore, if the system is not turned on before large amounts of ice accumulate, then some undesirable secondary effects may occur. For example, if operation of the propeller deicing system is delayed too long, the ice thrown from the propeller would be thicker than usual and could cause excessive fuselage skin damage.

The deicing systems need to be tested prior to flight into known icing conditions. This is done by turning on the system and observing the system ammeter or power meter to ensure the proper power is being provided. A periodic flicker should be observed when the system cycles from one area to another. The system would then be turned off until required. This conserves energy, extends the life of the heating element, and in some cases, keeps an element from burning out on the ground.

III.2.6.2.1 Typical System Operation.

The following is a description of a typical electrothermal deicing system in operation. When the aircraft flies into conditions where the outside air temperature is below a certain value, typically a value between 0° and 4°C, the deicing system becomes armed (prepared to start the deicing sequence).

Once activated by input from the external sensors (i.e., ice detector, ice rate probe, outside air sensor) or from pilot manual control, the deicing system will automatically sequence power to the propeller or rotor blades according to the programmed cycle schedule. In general, the deicing heater element on-time is set by the signal from the outside air sensor while the deicing trigger (start of deicing cycle) is controlled by the icing rate signal.

When the aircraft enters the icing environment, the ice detector is typically employed to sense the accumulation of ice and determine the rate of ice accretion. At a predetermined accretion (for helicopters it is generally based on a reference rotor ice thickness or a rotor torque increase) the deicing controller is activated and power is supplied in a predetermined sequence to the blade heater zones.

In this system, the off-time for a zone (i.e., delay time between deicing cycles) is controlled by the icing rate indication system while the heater element on-time is controlled by the outside air temperature indication system. Manual on-time control can also be set by a pilot switch; however, this would increase the potential for blade overheating if an incorrect switch position were selected by the pilot.

Once a deicing cycle is initiated, the cycle will proceed in the programmed manner through each heater element, always starting with the same initial element. For helicopters, the number of blades on the rotor head generally determines the deicing firing sequence from blade to blade. For example, on a four-bladed head, the first element on each of the four blades might be powered, or more probably, the first element of opposing blades (i.e., blades 1 and 3) would be powered, with power being applied element-to-element on blades 1 and 3 until each element had been fired. The power sequence would then switch to blades 2 and 4, and the power sequence repeated. In the case of an odd number of blades, such as three, the elements of each blade are fired simultaneously so as to prevent asymmetric ice shedding.

The element heating sequence may also be varied to meet the deicing requirements of changing icing conditions. For example, the power may be applied to an outboard rotor element or the stagnation region element more frequently to reduce the amount of ice buildup at a higher liquid water content.

During the heat-on portion of the deicing cycle, the controller resets the ice rate accumulator to zero and begins the ice rate accumulation for the next cycle. Under severe icing conditions (i.e., high liquid water content), the next deicing cycle may be ready to fire at the completion of the current cycle, thus the deicing sequence will begin immediately. At lower icing rates, there may be a considerable time delay before the next cycle.

III.2.6.2.2 Test Considerations.

Tests of components and subsystems during the design and development of an electrothermal propeller or rotor deicing system in simulated severe icing conditions are necessary as part of the overall certification/qualification process and should precede flight test of the complete aircraft ice protection system in natural icing conditions.

III.2.6.2.2.1 Heater Element Tests.

Several types of tests are used to provide design data for electrothermal heaters. Fatigue tests of candidate heater foils or wire matrices should be accomplished to establish fatigue life of the heater elements, especially for those bonded to structure with large cyclic loading or vibrations. Examples are rotor blades and leading-edge slats. The heater elements should be fabricated in a

sample which encloses the heater in the same structural elements which would surround it in the actual aircraft. The sample is then subjected to repetitive loads in a tensile fatigue test machine. While being subjected to the repetitive loads, the heater can be energized to simulate the effects of temperature variations.

The above described tests are useful for comparing the relative value of various heater element materials, but a more conclusive test may be devised. This test would use a structural segment fatigue test specimen exactly the same as used for normal qualification fatigue tests common to aircraft qualification programs. During such a test, the heater element should be energized to bring the heater element temperature up to the maximum permissible design values.

Another useful test is a bench test of a segment of the structure (rotor blade, propeller, inlet lip, etc.) to examine the heat transfer characteristics between the heater element and the surface. Variations in the thickness of materials and possible voids between the heater element and the surface, along with the spacing of the heater elements, can cause considerable inconsistency in surface temperatures. Since the deicing method requires the surface to be heated and then allowed to cool rapidly, it is important to know the time required to heat and then cool the structure. Although the surface heating and cooling is affected considerably in flight by the air flow and cloud moisture, much can still be learned from laboratory tests of a heater in a sample structural segment. Temperature sensors located within the design specimen can provide valuable heat transfer data.

III.2.6.2.2.2 Power Transfer System Tests.

For helicopters, all electrothermal rotor blade deicing systems to date use the same general method for electrical power transfer from fixed to rotating members. Propellers have similar power transfer methods. A two- or three-channel slip ring (DC or AC current, respectively) converts the fixed to rotating hardware and a solid state or mechanical stepping switch routes the electrical power to the appropriate blade's heater elements. Slip rings and stepping switch systems should be laboratory tested, simulating actual flight conditions as closely as possible, including temperature effects. The controller should also be tested to evaluate system performance and determine the controller's operating characteristics.

III.2.6.2.2.3 Icing Wind Tunnel Tests.

Icing wind tunnel tests are valuable to the extent that flight conditions can be simulated. The available facilities are given in section IV.1. In general, large size and high speeds are difficult to simulate, but a wide range of temperature and icing cloud conditions are available.

Icing wind tunnel tests of helicopter airfoils have been conducted, but no icing wind tunnel facility at present is large enough to contain a full-scale rotating helicopter rotor. Although the cyclical variations in blade angle of attack can be simulated, the dominant effects of centrifugal force cannot be simulated without actually rotating the blade. For this, ground spray rigs are useful; see section IV.1.3.2 and table IV.1-4. An oscillating rig can be used to simulate some of the angle-of-attack variations and blade bending effects to assist in the evaluation of the rotor

deicing capability. The icing wind tunnel is very helpful in better defining the required power density distribution and to verify adequate coverage.

III.2.6.2.2.4 Dry Air Flight Tests.

Prior to testing a blade electrothermal deicing system in simulated or natural icing conditions, flight tests in nonicing conditions can be used to determine system operating characteristics and internal blade temperature profiles under rotating conditions. Electromagnetic Interference (EMI) tests should also be done at this time.

III.2.6.2.2.5 Icing Flight Tests.

Flight tests in natural icing conditions are presently required as a major part of certification of an aircraft ice protection system for operational capability into known icing. Artificial icing tests, such as spray tankers, can also be used to supplement natural icing testing and expand the certification envelope. Flight in icing conditions is used to optimize heater on-times, deicing sequencing, and heater off-times. Icing flights can also be used to study the effects of ice shedding and discover any problems in flight which did not appear during previous testing.

Aircraft and systems performance degradation limits are generally established for flight into icing conditions. These limits include:

- Range of operation
- Maximum forward speed
- Maneuvering capability
- Rate of climb performance
- Dynamic and fixed-system component loads
- Engine Operation
- Aircraft systems and avionics system operation
- Vibration level

The test equipment required for an icing trials program using a real-time data acquisition system (i.e., onboard system or ground station telemetry system) includes:

- Master control unit
- Signal conditioners
- Pulse modulation unit
- Onboard unit
- Trend recorder
- Leading-edge cameras
- Rotor cameras
- Engine inlet cameras
- Leading-edge ice thickness indicators
- Ground station data processing and ground interface
- Reference liquid water content
- Reference outside air temperature
- Water droplet measuring system

The flight data parameters necessary for a detailed evaluation of the aircraft performance characteristics during the icing flight include:

- Basic aircraft parameters (airspeed, altitude, rotor rpm, OAT, control positioning, attitude, actuator positions, load factor, gross weight, rate of climb, time, event, fuel used, etc.)
- Rotor system (shaft torque, bending, fixed-link load, pitch-link load, pitch-shaft bending, blade temperatures, blade loads, etc.)
- Power plant (fuel flow, torque, gas generator speed, turbine inlet temp., etc.)
- Electrical system (current and voltage, LWC, icing rate, threshold signal, ice counts, and control discretes)
- Environmental (OAT, LWC, droplet size)

Figures III 2-18 and III 2-19 illustrate a typical deicing system optimization flow and the in-flight monitoring system, respectively.

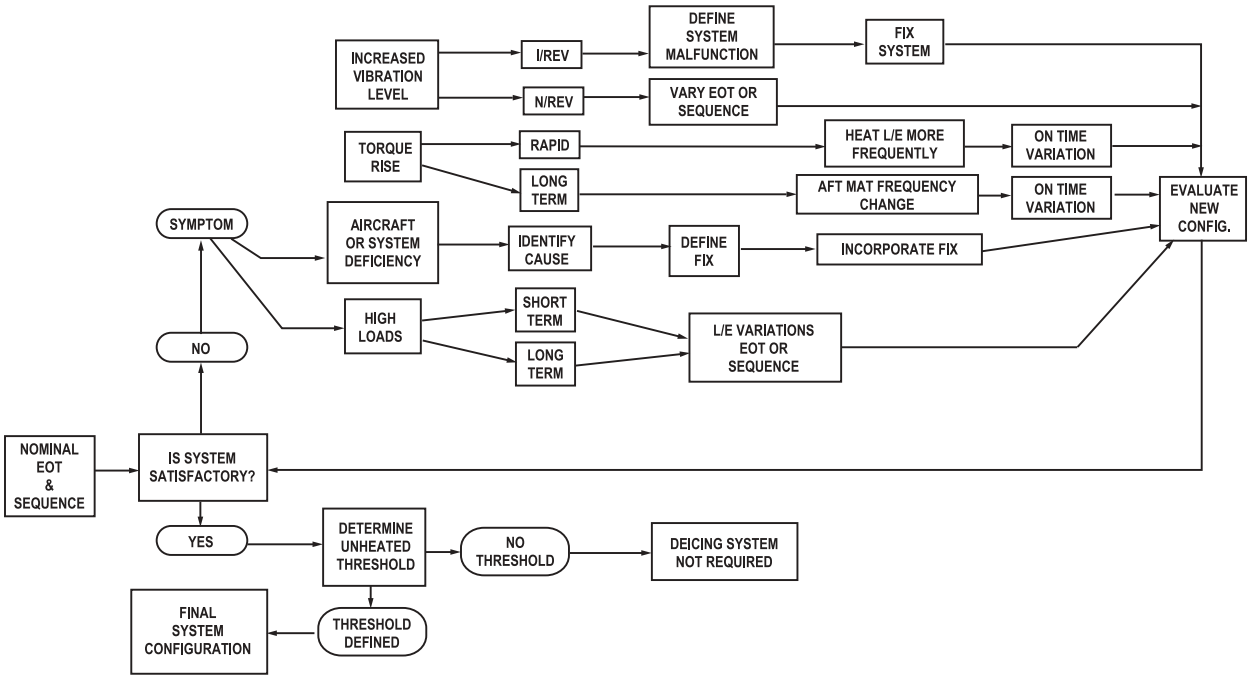

FIGURE III 2-18. DEICING SYSTEM OPTIMIZATION

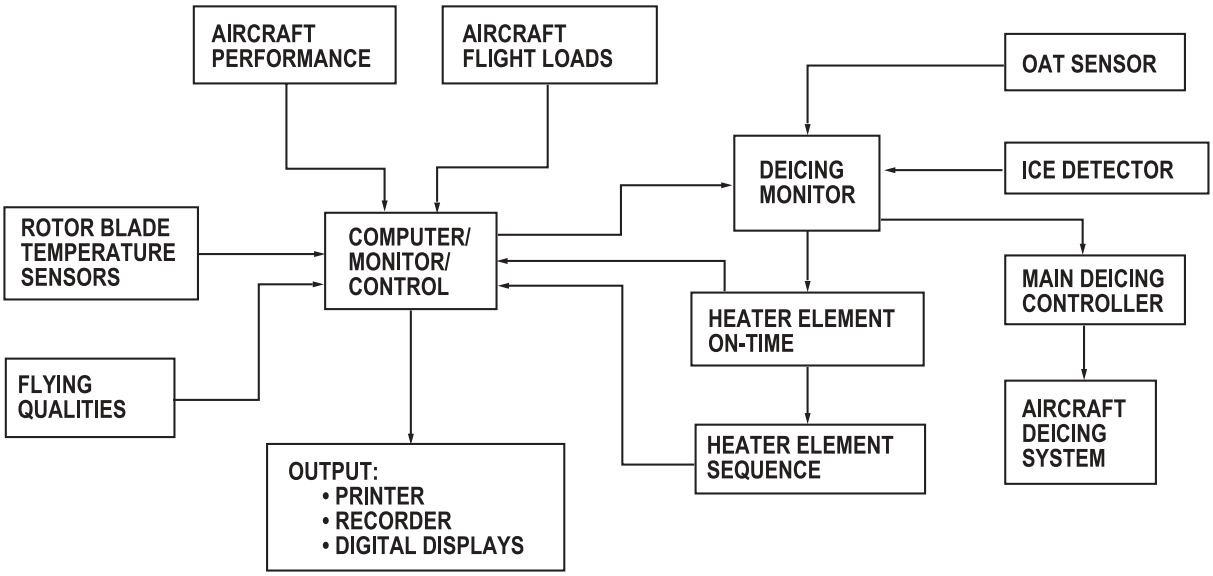

FIGURE III 2-19. DATA AND CONTROL FUNCTION IN-FLIGHT MONITOR

III.2.7 MAINTENANCE, INSPECTION, AND RELIABILITY.

The electrothermal elements should be inspected periodically for damage. Broken elements are a common form of damage and should be replaced. If other damage is found, the system should be checked thoroughly to determine if it is functioning properly.

Sometimes deterioration of the exterior covering on surface leading-edge boots, for example, may cause premature failures. These should be inspected periodically. They should be cleaned and a protective coating should be applied periodically per the manufacturer's recommendations.

There is little maintenance required for an electrically heated windshield except keeping it clean. Stone or gravel pitting on the outside layer may allow static electric discharges to occur to the heating element. This could cause the element to fail prematurely.

Slip rings must be kept clean to avoid sparking and the resulting pitting of the contact elements. If inspection of the slip rings is difficult, sealing of the slip rings from outside contamination must be done as well as possible.

III.2.8 PENALTIES.

There are three primary areas of penalties due to electrothermal deicing installation: weight, electric power, and aerodynamic performance. The power required for a complete electrothermal anti-icing system is very large and in many cases impractical. Typical weight and power requirements are given in section III.2.4. There are two primary methods of installing electrothermal systems: attaching flexible wrap-around heating pads to the structure with adhesive and molding the heating element into the surface of the structural member. Typical weights involved in either installation are presented in table III 2-1.

The heating pads used in these installations are fairly thin and may not affect the aircraft's performance. Little, if any, performance degradation would be expected from molded heater installation. In higher-speed aircraft and helicopter blades, rubber heating pads are subject to sand and rain erosion and hail damage. A metal overshoe will protect the pads and at the same time may even out the heat distribution and prevent cold spots on the surface. Detracting from the overshoe installation is the loss in heater efficiency and the degradation in rotor blade performance.

Electrothermal ice protection may be applied to windshields with small or negligible loss in aircraft performance (section III.2.3.2).

Electrothermal ice protection may be installed on the external surface of a propeller (section III.2.3.5) without appreciably affecting its performance. All power to the heating pads is supplied through slip rings at the propeller hub, resulting in added aircraft weight. Heating element installation on the propeller interior would protect the heating elements from damage, but the efficiency reduction and the repair difficulty make the external system more feasible.

III.2.9 ADVANTAGES AND LIMITATIONS.

The advantages and limitations of the electrothermal system will be discussed and compared with other candidate systems in section III.6.

III.2.10 CONCERNS.

Runback icing occurs when local heating of accumulated ice results in water running back from heated areas to unheated areas where refreezing then occurs.

For an anti-icing system, the entire surface may need to be heated to prevent runback or all the water droplets impinging on the leading-edge surface may have to be evaporated. For engine inlets, anti-icing protection is preferred to avoid accumulated ice from being ingested and possibly causing damage or engine flameout.

The minimum time required to heat the critical surface area using the deicing system to release the ice with a minimum amount of water remaining must be found during test. Rotor blades are generally deiced due to power constraints. Runback on rotor blades may cause aerodynamic degradation and may cause residual rotor performance losses that cannot be eliminated by the deicing system.

The impact of runback ice refreeze varies considerably with rotor geometry such as blade chord, thickness, and leading-edge profile.

Element burnout is of concern since no redundancy exists and failure is total. No practical method is available for detecting incipient burnout.

Ice shedding is a concern for all ice protection systems, and the electrothermal system does not give a fixed ice particle size under normal icing condition variations. Ice shed asymmetrically

can cause difficulty ranging from bothersome (inboard wing leading edges) to disastrous (helicopter rotors).

III.2.11 REFERENCES.

2-1. Bowden, D.T., Gensemer, A.E., and Skeen, C.A., "Engineering Summary of Airframe Icing Technical Data," FAA ADS-4, December 1963.

2-2. Lawrence, Jr., J.H., "Guidelines for the Design of Aircraft Windshields/Canopy Systems," USAF WADC-TR-80-3003, February 1980.

2-3. Hassard, R.S., "Plastics for Aerospace Vehicles, Part II, Transparent Glazing Materials," MIL-HDBK-17A, Part II, January 1973.

2-4. Anon., S.A.E. Aerospace Report, "Applied Thermodynamics Manual," SAE, ARP-1168, 1969.

2-5. Messinger, B.L. and Werner, J.R., "Design and Development of the Ice Protection Systems for the Lockheed Electra," paper presented at 1959 Aircraft Ice Protection Conference, D. Napier and Son, Ltd. (Also published in December 1959 issue of Space/Aeronautics.)

III.2.12 GLOSSARY.

Evaporative system —Any anti-icing system that supplies heat sufficient to evaporate all water droplets impinging on the heated surface.

Light icing—The rate of accumulation that may create a hazard if flight is prolonged in this environment. Occasional use of deicing/anti-icing equipment removes/prevents accumulation.*

Liquid water content (LWC)—The total mass of water contained in all the liquid cloud droplets within a unit volume of cloud. Units of LWC are usually grams of water per cubic meter of air (g/m^3).

Median volumetric diameter (MVD)—The droplet diameter which divides the total water volume present in the droplet distribution in half; i.e., half the water volume will be in larger drops and half the volume in smaller drops. The value is obtained by actual drop size measurements.

Micron (μm)—One millionth of a meter.

Moderate icing—The rate of accumulation is such that even short encounters become potentially hazardous and use of deicing/anti-icing equipment or diversion from the area and/or altitude is necessary.*

* The FAA published new proposed definitions of light, moderate, and severe icing, as well as other icing terms, in the Federal Register, Vol. 65, No. 247, pp. 80984-80986, on Friday, December 22, 2000. Comments have been received, and the FAA is currently considering those comments.

Running-wet system—Any anti-icing system that supplies only enough heat to prevent impinging water droplets from freezing on the heated surface.

Severe icing—The rate of accumulation is such that deicing/anti-icing fails to reduce or control the hazard requiring immediate diversion from the area and/or altitude.*

Stagnation point—The point on a surface where the local velocity is zero.

Trace icing—Ice becomes perceptible. The rate of accumulation is slightly greater than the rate of sublimation. It is not hazardous, even though deicing/anti-icing equipment is not used, unless encountered for an extended period of time.

* The FAA published new proposed definitions of light, moderate, and severe icing, as well as other icing terms, in the Federal Register, Vol. 65, No. 247, pp. 80984-80986, on Friday, December 22, 2000. Comments have been received, and the FAA is currently considering those comments.